United States
Department of
Agriculture

Marketing and
Regulatory
Programs

Grain Inspection,
Packers and Stockyards
Administration

Federal Grain
Inspection
Service

Washington, D.C.

September 2016

INSPECTING GRAIN Practical Procedures for Grain Handlers

United States Department of Agriculture
Grain Inspection, Packers and Stockyards Administration
Federal Grain Inspection Service

Informational Resource

September 2016

INSPECTING GRAIN: Practical Procedures for Grain Handlers

Foreword

This guide is not designed for the official inspection system. Consequently, many of the procedures contained herein are not appropriate for use by official inspection personnel.

Published July 1991
Revised
May 1993
October 1999
December 2006
February 2009
May 2015
September2016

The U.S. Department of Agriculture (USDA) prohibits discrimination in its programs on the basis of race, color, national origin, sex, religion, age, disability, political beliefs, and marital or familial status. (Not all prohibited bases apply to all programs.) Persons with disabilities who require alternate means for communication of program information (Braille, large print, audiotape, etc.) should contact USDA's TARGET Center at (202) 720-2600 (voice and TDD).

To file a complaint, write to the USDA, Office of Civil Rights, Room 326-W, 1400 Independence Avenue, SW, Washington, DC 20250-9410, or call (202) 720-5964 (voice and TDD). USDA is an equal employment opportunity employer.

Preface

Across America, U.S. grain flows from farm to elevator to destinations around the world. The Grain Inspection, Packers and Stockyards Administration (GIPSA), Federal Grain Inspection Service (FGIS), an agency of the United States Department of Agriculture (USDA), helps move that grain into the marketplace by providing farmers, grain handlers, processors, exporters, and international buyers with information that accurately and consistently describes
the quality and quantity of grain being bought and sold.

The official inspection and weighing system is a unique public-private partnership overseen by FGIS. The system includes Federal offices and States and private agencies authorized by FGIS to provide official inspection and weighing service to the domestic and export grain trade. While the composition of the official system is diverse, the results are not. Every customer, whether on the East Coast, the Gulf of Mexico, the Midwest, or the Pacific Northwest receives consistent and accurate service. That's because every official service provider operates under uniform, official U.S. grain standards and procedures.

Private companies and in-house inspectors can provide grain quality analyses. Only the partners of the official system FGIS field offices and State and local agencies authorized by FGIS, however, can provide an official grain inspection certificate. The official system provides more than just information regarding the quality and quantity of grain inspected. It also assures the following:

Consistency - Official inspections are based on established standards, and on sound, proven and standardized procedures, techniques, and equipment.

Verifiable Accuracy - The work of official personnel is reviewed and monitored by an extensive quality assurance program where every official State and private agency is backed by the resources and expertise of the FGIS Technical Center in Kansas City, Missouri.

Information - Official tests provide a wealth of information about sanitary, physical, food safety, and intrinsic quality characteristics.

Responsiveness - New tests and procedures are continually being developed.

Professionalism and Integrity - Official personnel pass rigorous tests and undergo extensive and continuous training.

Credibility - U.S. and international buyers rely on official inspection certificates to provide accurate descriptions of the grade, class, and condition of grain.

Not everyone can or should always have their grain officially inspected. For this reason, FGIS wrote this guide which is specifically designed for producers, warehouse managers, elevator operators, and all others who market or store grain at country points, and who want to learn more about inspecting grain.

The guide was developed to:

Identify and encourage the use of practical, cost-effective procedures for conducting commercial grain inspections. It provides grain handlers with simple, inexpensive, and easy to use procedures for inspecting grain that can be used at country elevators and other first point of delivery points.

Provide the Commodity Credit Corporation (CCC) with approved procedures for inspecting grain acquired from producers. CCC utilizes these procedures to inspect and evaluate the condition of grain acquired from producers at country/terminal elevators and other facilities operating under Uniform Grain Storage Agreement (UGSA) contract. For USGSA purposes, “authorized grain evaluation procedures” are considered to be the procedures identified in this guide or any other procedures that will provide comparable results.

This guide was not designed for the official inspection system. Consequently, many of the procedures contained in this document are not appropriate for use by official inspection personnel.

Table of Contents

Introduction

Section I. Sampling Grain

Section II. Inspecting Grain

Section III. Grading Grain

Section IV. Not Standardized Grain and Commodities

Appendix I. Selected References

Appendix II. Grades and Grade Requirements

Section I: Sampling Grain

THE IMPORTANCE OF PROPER SAMPLING 2

SAMPLING GRAIN AT REST 3

Hand Probes 3

Mechanical Probes 6

SAMPLING MOVING GRAIN 7

Diverter-Type Mechanical Samplers 7

Woodside-Type Mechanical Samplers 8

Pelican Samplers 9

Truck (Tailgate) Samplers 10

Ellis Cup Samplers 11

Section I: Sampling Grain

THE IMPORTANCE OF PROPER SAMPLING

Sampling is an essential part of the inspection process and one that is critical to the accuracy of the final inspection results. If a sample is not representative of the lot, the inspector's final grade will not reflect the true grade of the lot.

To ensure that a sample is representative:

1. Use appropriate equipment. When grain is sampled at rest in a carrier or container, use a hand probe or a mechanical probe to draw the sample. For sampling moving grain, use a diverter-type or Woodside-type mechanical sampler, a pelican, a truck (tailgate) sampler, or an Ellis cup.

2. Take two or more samples at random locations or at random intervals. Grain is nonhomogeneous. That is, the whole kernels, broken kernels, and foreign material that are present in any lot of grain, segregate whenever grain is handled or transported. Fine particles tend to concentrate in a region near the center of the container and coarse particles in the outer perimeter. For this reason, avoid probing in the "spout-line" (i.e., that area of the container directly below the loading spout where fines accumulate).

3. Handle samples carefully. Make sure the sample containers are completely clean. Do not drop samples and do not allow them to become wet.

4. Never take a hand-grab or scoop sample.

SAMPLING GRAIN AT REST

Grain shipped in trucks, railcars, and barges, and grain stored in bins, must often be sampled while it is at rest in the carrier or bin. The only effective method of obtaining representative samples from stationary grain is with either a hand probe (sometimes referred to as a trier) or a mechanical probe.

Hand Probes

Hand probes are made of brass or aluminum and consist of two tubes, one inside the other. There are two types of hand probes:

> Compartmented probes. These have an inner tube that is divided into compartments. The outer tube has slots which match the compartment openings of the inner tube. When the tubes are aligned, grain flows into the compartments.
>
> Open-throat probes. These have an inner tube that is open as is the probe handle. This feature allows the sample to be poured from the probe directly into the sample container.

NOTE: Open-throat probes tend to draw more of their sample from the top portion of the grain in the lot than compartmented probes. Therefore, the composition of a sample obtained with an open-throat probe may differ slightly from that of a sample drawn with a compartmented probe.

Hand probes come in 5-, 6-, 8-, 10-, and 12-foot lengths. Use a probe long enough to reach the bottom of the carrier. The better access you have to all portions of the grain, the better sample you will obtain.

Carrier	Probe Length
Barges and Lash Barges	12-foot
Bins	12-foot
Boxcars and Containers	6-foot
Flat-Bottom Trucks, Trailers, and Wagons	5- or 6-foot (as needed)
Hopper-Bottom Trucks, Trailers, and Wagons	6- to 10-foot (as needed)
Hopper Cars	10- or 12-foot (as needed)

To draw a sample with a hand probe:

1. First, determine the specific locations in the carrier that must be probed. Figures 1-3 show the locations for drawing probe samples (manual and mechanical) from barges, bay boats, hopper cars, trailers, trucks, and wagons.

2. At each probe location, insert the probe into the grain at a slight angle with the slots closed.

3. Then, with the slots facing upward, open the probe and move it up and down in two short motions.

4. Next, close the probe, withdraw it from the grain, and empty the sample onto a canvas sheet or pour it into a sample container.

While drawing the sample, observe the general condition of the grain and check it for objectionable odors, insect infestation, large stones, pieces of metal or glass, and any other potentially harmful condition.

Draw at least two probe samples from any point in the blue shaded area for lots that are 600 bushels or less. For larger lots, draw at least three probe samples.

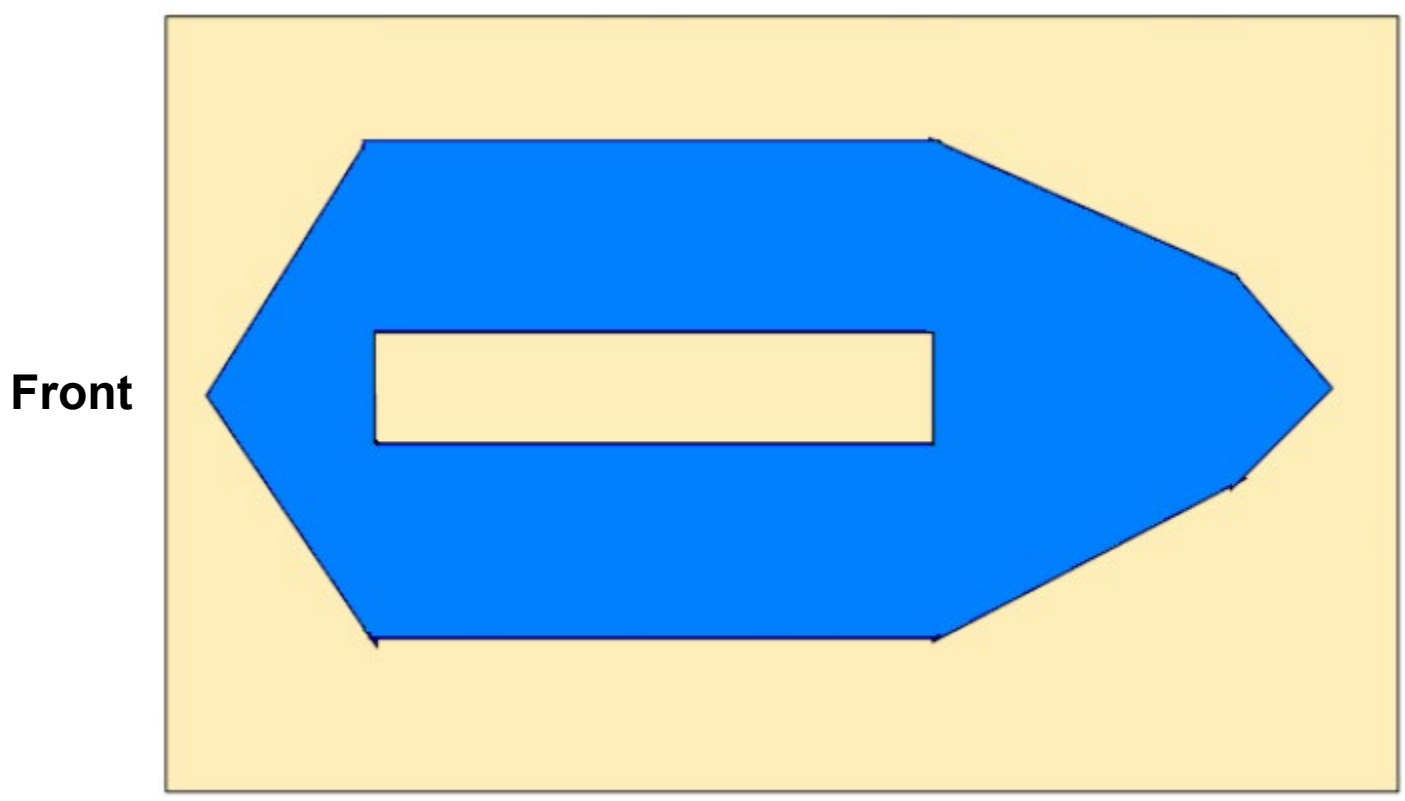

Figure 1. Probe Pattern for Sampling Trucks, Trailers, and Wagons. (Courtesy: Charles R. Hurburgh, Jr., Iowa State University)

Draw probe samples from the points marked with an X. Avoid probing in the spout-lines.

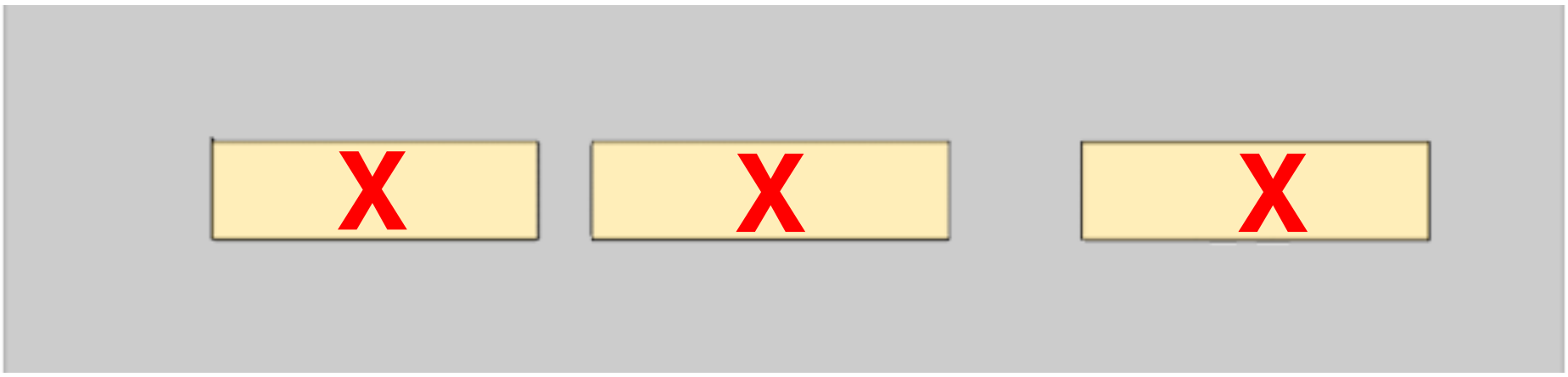

Figure 2. Probe Pattern for Sampling Hopper Cars.

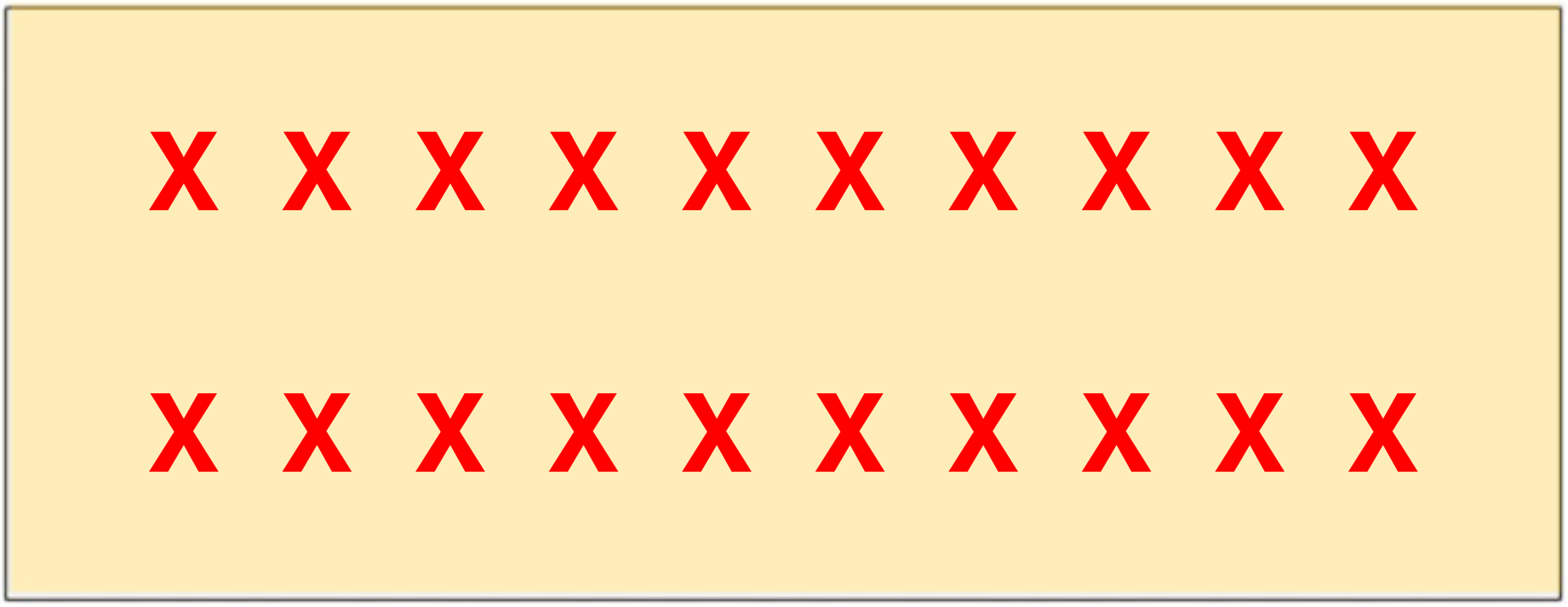

Figure 3. Probe Pattern for Sampling Barges and Lash Barges.

Mechanical Probes

Mechanical probes, like hand probes, are used to sample stationary lots of grain in trucks and in other open-top carriers. There are two types of mechanical probes that may be used: (1) the gravity-fill probe and (2) the core probe. A third type, the in-load suction probe, has a tendency to overestimate foreign material and should not be used for trade.

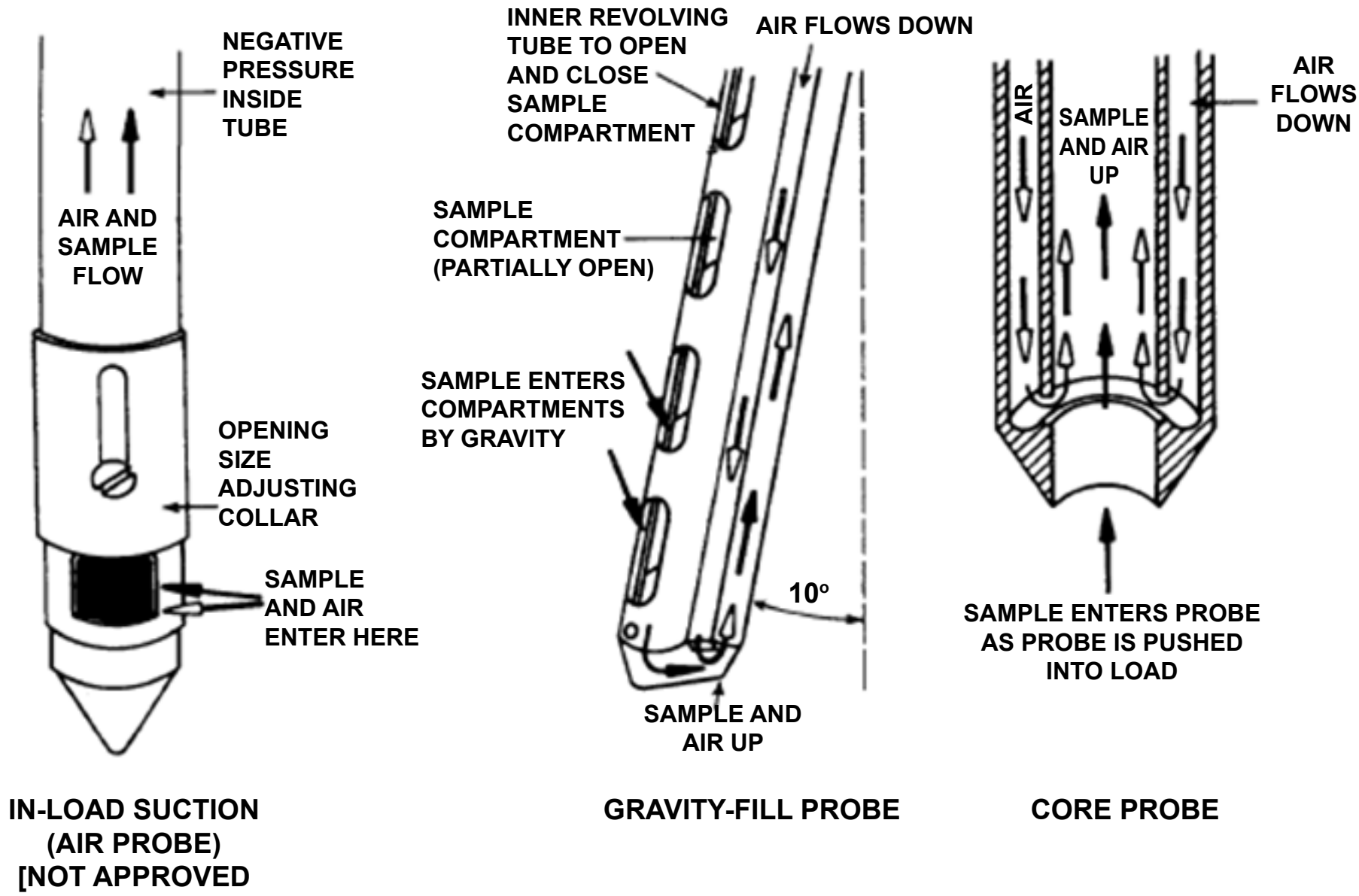

Figure 4. Types of Mechanical Probes

Before using a mechanical probe,

1. Make sure that it is working properly and does not contain grain from a previous carrier in its system.

2. Use Figures 1 - 3 to determine the specific locations that must be probed.

3. At each probe location, insert the probe vertically into the grain and draw a sample.

SAMPLING MOVING GRAIN

Diverter-Type Mechanical Samplers

Diverter-type (D/T) mechanical samplers are used to sample grain moving through grain spouts or off of the end of conveyor belts. D/T's draw their sample by periodically moving a pelican-like device through the entire grain stream. The movement of this device is electrically timed and powered by an air cylinder or electric motor.

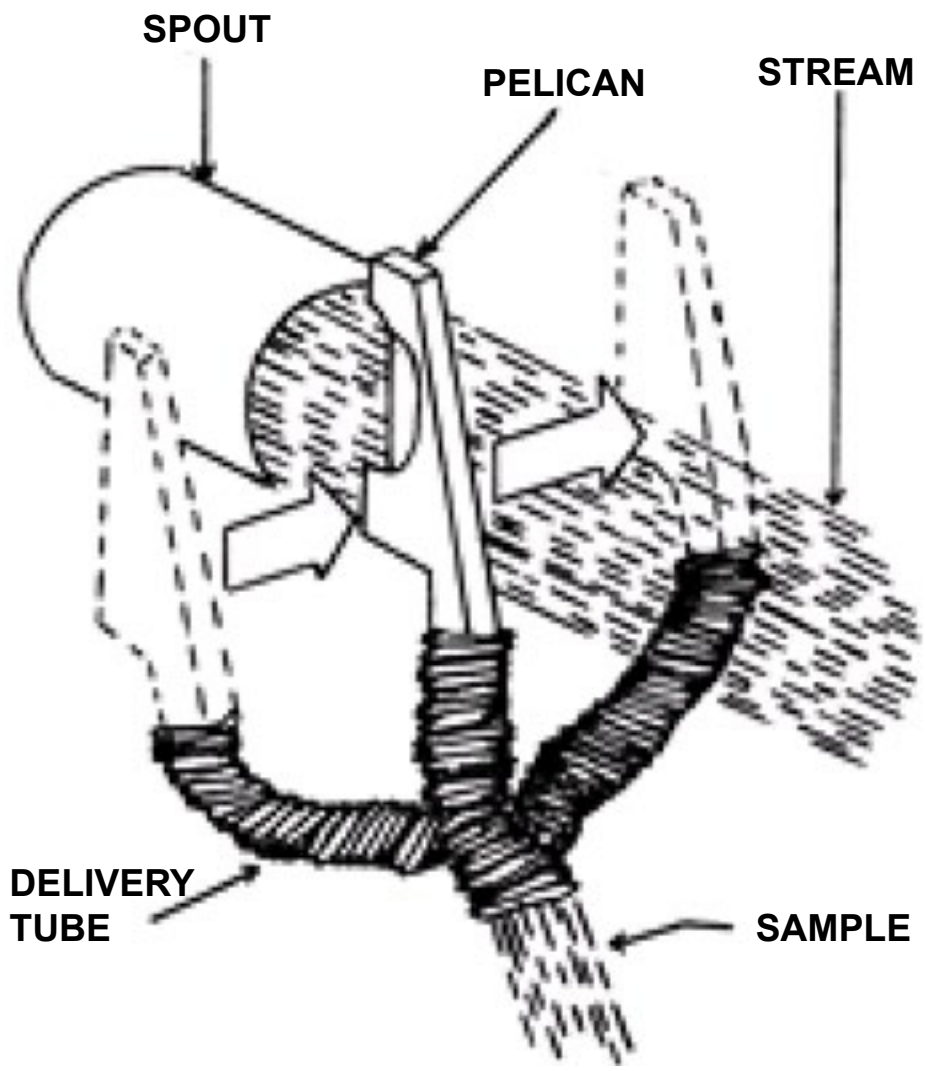

Figure 5. Cross-Section of a D/T Mechanical Sampler.

Before using a D/T, be sure that:

1. It is working properly and not clogged with old grain or dust.

2. The timer is correctly set. If the flow-rate is 4,000 bushels or less per hour, set the timer so that the diverter crosses the sampling area at least once every 3 minutes. If the flow-rate is more than 4,000 bushels per hour, set the timer for one diverter cut for every 200 bushels loaded.

Woodside-Type Mechanical Samplers

Woodside samplers are used to sample grain moving along conveyor belts. A Woodside sampler is comprised of small sample buckets attached to chains which are connected between an upper and a lower sprocket. A metal frame supports the upper and lower shafts on which the sprockets turn. The sampler has a special roller, located approximately 10 inches upstream from the lower sprocket, which serves as the machine's drive shaft.

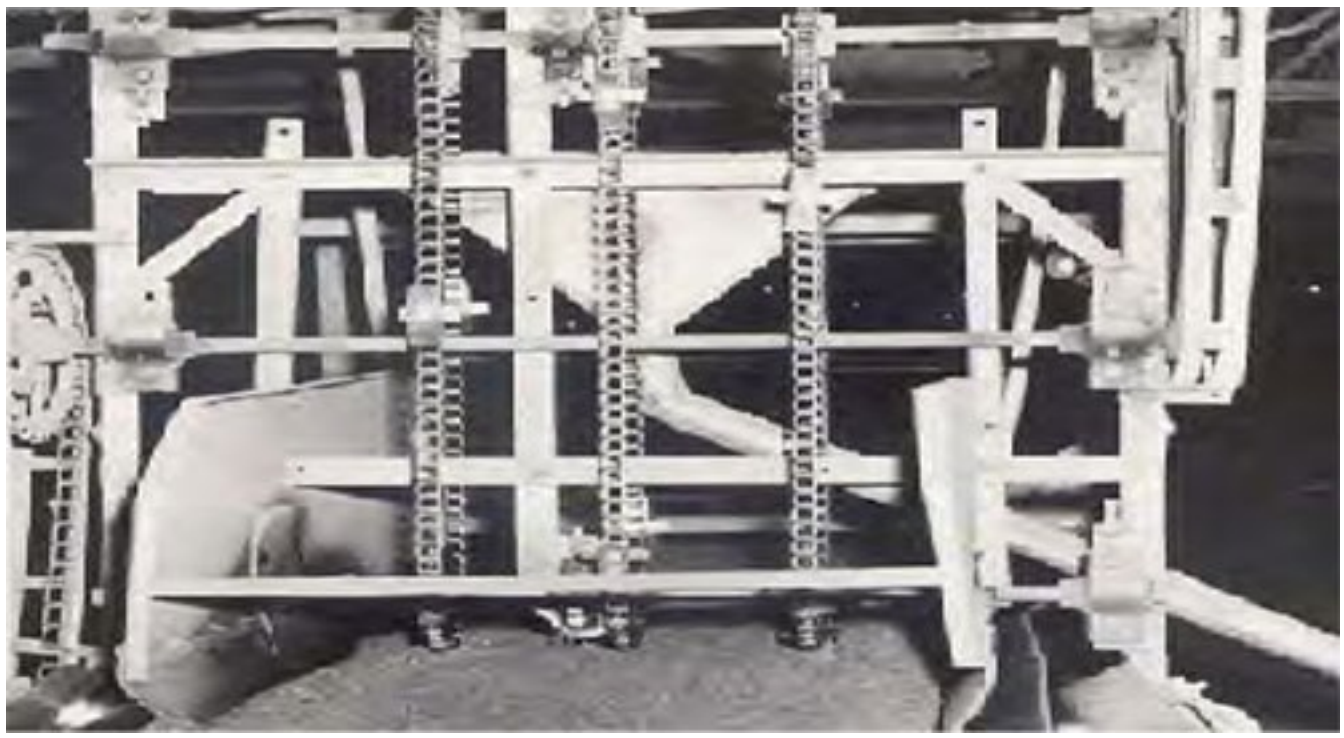

Figure 6. Woodside-Type Mechanical Sampler.

Before using a Woodside sampler, be sure that:

1. The apparatus is clean and the area around it is well lighted and free of spilled grain or other debris.

2. Each chain contains the same number of sample buckets and that they are evenly spaced on the chain. Examine the sample buckets for wear. Any bucket worn in excess of 3/16 inch (in the center) should be replaced. When the bucket is in the extreme downward position, the clearance between it and the belt should be approximately 3/8 inch. Make sure the tension of the chains is snug, but not tight.

Pelican Samplers

Pelican samplers are used to sample grain in a falling stream. A pelican is a leather pouch, approximately 6 inches deep, 2 inches wide, and 18 inches long, attached to a long pole. A metal band along the edge of the pouch holds it open. The number of samples that should be drawn with a pelican depends on the amount of sample that is needed and the amount of grain being loaded into the carrier. Regardless, draw at least two samples from each carrier.

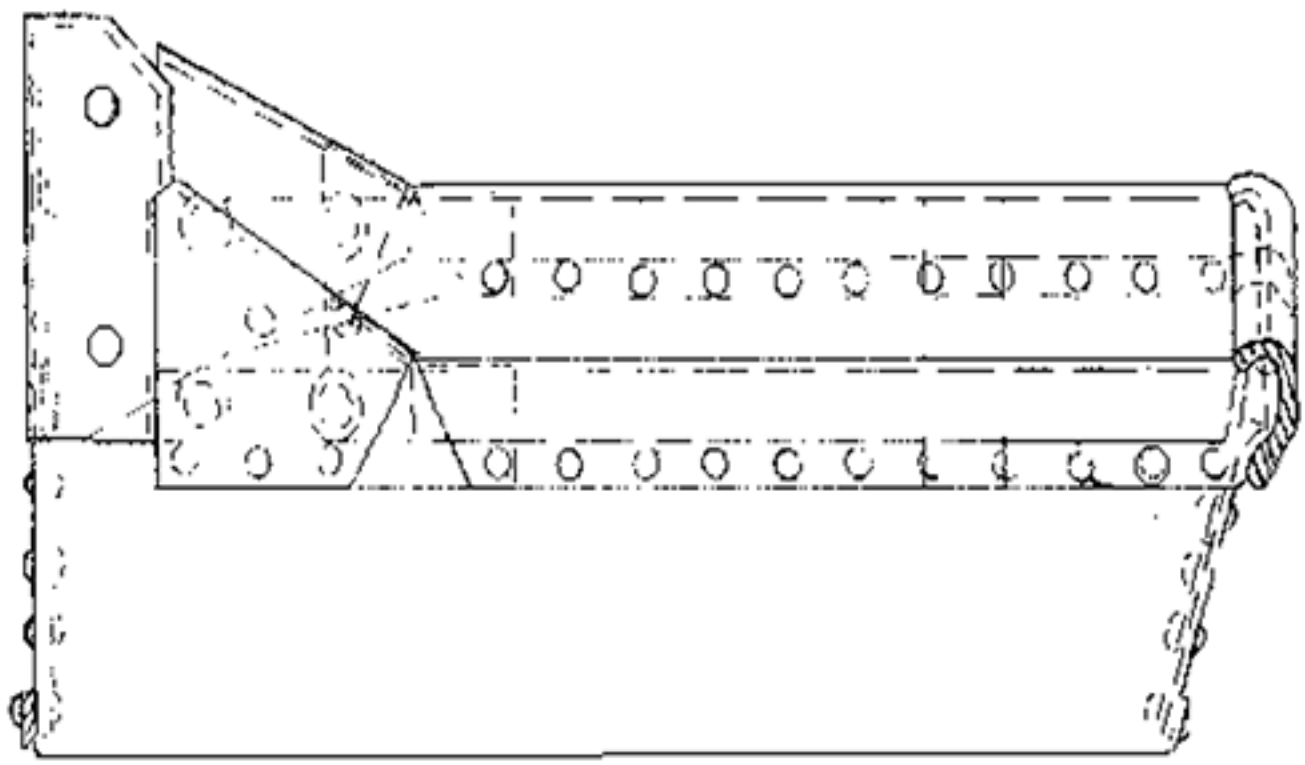

Figure 7. Pelican Sampler.

Take samples at random intervals in the following manner:

1. Make sure the loading spout is positioned so that the pelican will swing easily through the entire falling stream.

2. Hold the pelican so that the high edge of its pouch is next to the stream.

3. Grasping the pelican firmly, swing it completely through the stream in one
4. continuous motion. Do not allow it to overflow.

5. Pour the contents of the pelican into a sample container.

Truck (Tailgate) Samplers

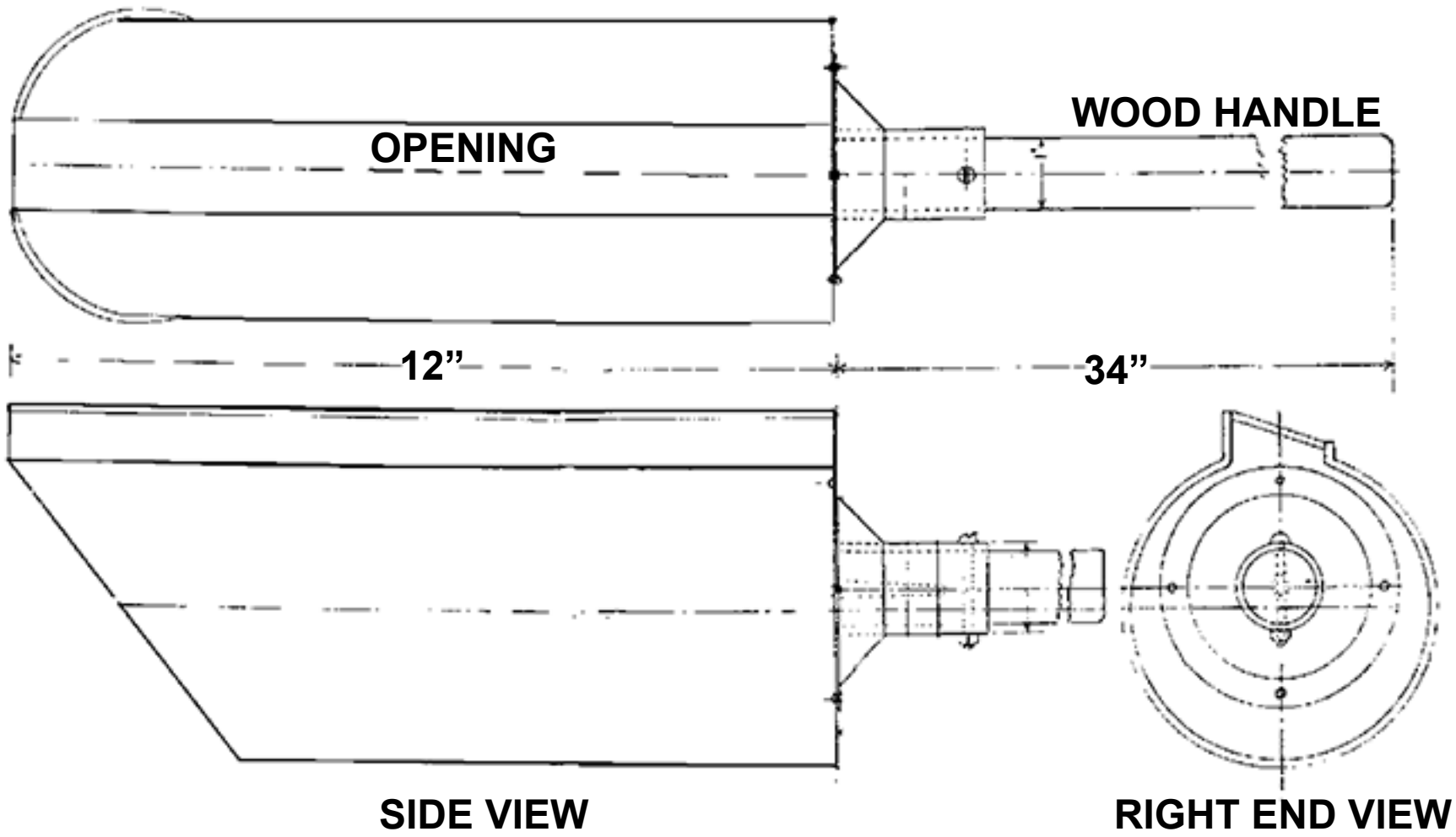

Figure 8. Truck Sampler.

Truck samplers, which are simple metal containers attached to wooden handles, are used to sample grain being unloaded from trucks. A truck sampler is used in the same manner as a pelican sampler (i.e., pulled or swung through the falling stream of grain). And, like pelicans, truck samplers work best when the grain is falling at a moderate rate. The number of samples that should be drawn with the truck sampler depends on the amount of sample that is needed and the amount of grain being discharged from the truck. Regardless, draw at least two samples from each truck.

Take samples at random intervals in the following manner:

1. Hold the truck sampler so that it is next to one side of the falling stream.

2. Pull it through the grain stream in one continuous motion.

3. Pour the contents of the sampler into a container.

Ellis Cup Samplers

Ellis cup samplers, which are manual sampling devices made of light-weight aluminum, are used to sample grain moving on conveyor belts. The number of samples that should be drawn with an Ellis cup depends on the amount of sample needed and the amount of grain being loaded into or unloaded from the carrier. Regardless, draw at least two samples from each carrier.

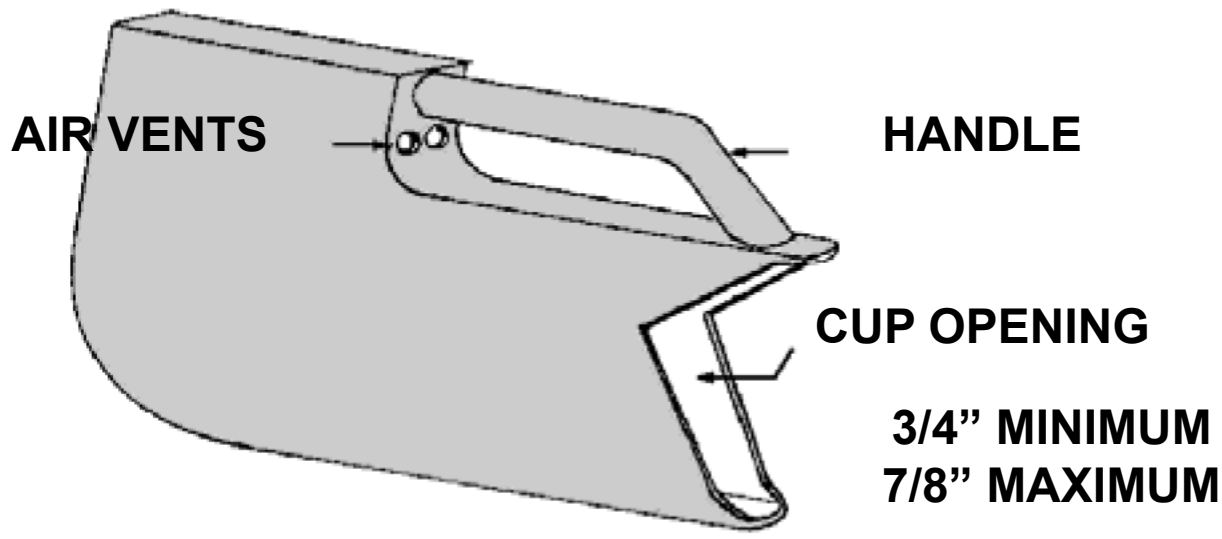

Figure 9. Ellis Cup Sampler

Take samples at random intervals in the following manner:

1. Grasp the Ellis cup firmly in both hands and stand as close as possible to the point where the grain is delivered to the conveyor belt. Face “upstream” holding the Ellis cup over the grain.

2. Insert the heel (curved part) of the cup, with the opening facing in the opposite direction from the flow, into the center of the grain stream. Push the open end downward through the grain until the bottom of the cup is parallel to the belt. (Avoid catching the cup on the belt splice that connects the belt ends. Ripples usually occur in the grain stream over the belt lacing.)

3. When the cup is full, move the open end of the cup upward and remove the cup from the stream. Pour the contents into a sample collection container.

4. Draw two more portions, one from halfway between the center and the right-hand edge of the stream and the other from halfway between the center and left-hand edge. Pour each cup into the sample container.

Section II: Inspecting Grain

THE INSPECTION PROCESS 2
PORTION SIZES 3
HARMFUL SUBSTANCES 4
OBJECTIONABLE ODORS 8
HEATING 8
INSECT INFESTATION 9
MOISTURE 9
TEST WEIGHT 10
DOCKAGE 11
FOREIGN MATERIAL 13
DAMAGED KERNELS 17
PROTEIN, OIL, AND OTHER INTRINSIC CHARACTERISTICS 20
STRESS CRACK ANALYSIS IN CORN 21
AFLATOXIN 22
DON 23
FUMONISIN 24
ZEARALENONE 24
OCHRATOXIN A 25
OTHER FACTORS 26

Section II: Inspecting Grain

THE INSPECTION PROCESS

The process of inspecting grain begins when the sample is drawn and usually follows a prescribed path whether the grain is being inspected for grade or for factors only. First, the sample is examined for objectionable odor, insect infestation, and other harmful or unusual conditions. Then, a portion of grain is divided out from the sample and its moisture content determined. The sample may next be tested for dockage, followed by a test weight determination. For some grains, test weight is determined before dockage. After this, the sample is divided into small portions which are examined for other factors, such as damaged kernels and foreign material.

To ensure the accuracy of inspections, always use dependable, well-maintained equipment. Install, align, standardize, calibrate, and maintain inspection equipment according to the manufacturer's recommendation. Test all equipment at least twice a year against a known standard and make adjustments as needed.

In addition, scales used to weigh samples and factor portions should be National Type Evaluation Program (NTEP) certified and tested by the local State weights and measures agency. Also, use only scales that have the proper division size for the size of the portion being weighed. The scale division for grain-test scales should not exceed 0.2 grams for loads through 500 grams, and should not exceed 1 gram for loads above 500 grams and through 1,000 grams.

It is also important that factor portions be adequate in size. The portion size needed to determine a particular factor depends on the nature of that factor, the equipment that is required, and the degree of accuracy that is desired. For most factor determinations, the larger the portion analyzed, the more accurate the results.

Always use a Boerner divider or any other device that gives equivalent results when reducing samples in size or dividing out factor portions from samples.

PORTION SIZES

The recommended minimum portion sizes (in grams) are as follows:

	Barley	Corn	Oats	Sorghum	Soybeans	Wheat
Damage	15	125	30	15	125	15
Dockage	250	NA	NA	250	NA	250
Foreign Material	30	250	30	250	125	30

Heating	The lot as a whole.
Infestation	The original sample or lot as a whole.
Moisture	The amount recommended by the instrument manufacturer.
Objectionable odors	The original sample or lot as a whole.
Oil	The amount recommended by the instrument manufacturer.
Other Factors	Refer to the “Other Factors” Section.
Protein	The amount recommended by the instrument manufacturer.
Test Weight	An amount sufficient to cause grain to overflow the kettle.

NOTE: For other kinds of grain, use the portion sizes recommended for a grain of similar size

HARMFUL SUBSTANCES

Grain that is contaminated by harmful substances grades “U.S. Sample grade.” To be considered “contaminated,” the original sample must contain:

Substance	Grain	Amount
Animal Filth (e.g., excreta)	Corn	Animal filth in excess of 0.20 percent.
	Barley, Flaxseed, Mixed Grain, Oats, and Sunflower seed	10 or more rodent pellets, bird droppings, or an equal quantity of other animal filth.
	Sorghum & Soybeans	9 or more rodent pellets, bird droppings, or an equal quantity of other animal filth.
	Rye and Triticale	2 or more rodent pellets, bird droppings, or an equal quantity of other animal filth.
	Wheat	1 or more rodent pellets, bird droppings, or an equal quantity of other animal filth.
	Canola	3 or more rodent pellets, bird droppings, or an equal quantity of other animal filth.
Castor Beans	Barley, Corn, Flaxseed, Mixed Grain, Oats, Triticale, and Sunflower seed	2 or more castor beans.
	Sorghum, Soybeans and Wheat	1 or more castor beans

Substance	Grain	Amount
Cockleburs	Barley, Corn, and Flaxseed	8 or more cockleburs or similar seeds.
	Sorghum	7 or more cockleburs or similar seeds.
Crotalaria Seeds	Barley, Corn, Flaxseed, Mixed Grain, Oats , Triticale, and Sunflower seed	3 or more crotalaria seeds.
	Sorghum, Soybeans, and Wheat	2 or more crotalaria seeds.
Distinctly Low Quality	All Grains	When a lot of grain is of inferior quality because of unusual state/condition and it cannot be graded properly using the grading factors in the standards.
Glass	Barley, Corn, Flaxseed, Mixed Grain, Oats, Triticale and Sunflower seed.	2 or more pieces of glass.
	Sorghum	1 or more pieces of glass.
	Wheat, Soybeans, and Canola	0 pieces of glass.

Substance	Grain	Amount
Stones	Barley, Rye, Mixed Grain and Triticale	8 or more stones or any number of stones which have an aggregate weight in excess of 0.2 percent of the sample weight.
	Flaxseed, Oats, and Sunflower seed	8 or more stones which have an aggregate weight in excess of 0.2 percent of the sample weight.
	Sorghum	7 or more stones which have an aggregate weight in excess of 0.2 percent of the sample weight.
	Canola	Any number of stones which have an aggregate weight in excess of 0.05 percent of the sample weight.
	Corn	1 or more stones which have an aggregate weight in excess of 0.1 percent of the sample weight.
	Soybeans	3 or more stones which have an aggregate weight in excess of 0.1 percent of the sample weight.
	Wheat	3 or more stones or any number of stones which have an aggregate weight in excess of 0.1 percent of the sample weight.

Substance	Grain	Amount
Unknown Foreign Substance	All Grains, except Canola,Sorghum and Soybeans	4 or more particles of unknown foreign substance, including rock salt or crystalline substances, or a commonly recognized harmful or toxic substance, including so-called “pink wheat”.
	Canola	1 or more particles of unknown foreign substance, as described above.
	Sorghum and Soybeans	3 or more particles of unknown foreign substance, as described above.

NOTE: Wheat that contains a total of 5 or more particles of any harmful substances and soybeans that contain 10 or more particles of any harmful substance (i.e., animal filth, castor beans, crotalaria seeds, glass, stones, or unknown foreign substances) should be considered “contaminated” and graded “U.S. Sample grade.”

OBJECTIONABLE ODORS

Grain that has a musty, sour, or commercially objectionable foreign odor (except smut or garlic) shall grade “U.S. Sample grade.” Determine whether grain has an objectionable odor on the basis of an examination of the original sample or the lot as a whole.

Odor	Characteristics
Musty	Earthy, moldy, and ground-like (not to be confused with a burlap bag odor).
Sour	Rancid, sharp, or acrid, e.g., elevator boot, insect waste, and fermenting grain odor.
Commercially Objectionable Foreign Odor	Any odor not normal to grain which, because of its presence, renders the grain unfit for normal commercial usage, e.g., odor of fertilizer, hides, oil products, skunks, smoke, burnt grain, and decaying animal and vegetable matter. Fumigant and insecticide odors are not considered commercially objectionable foreign odors, unless they are caused by fumigant or insecticide that does not dissipate quickly. If a grain sample contains a very strong fumigant or insecticide odor, allow the sample to aerate for up to 4 hours before making the odor determination.

HEATING

Heating is a condition common to grain that is spoiling. It may be caused by insect infestation or, more usually, by the action of micro-organisms in grain with a high moisture content. In addition to its high temperature, heating grain often gives off a sour odor. Grain that is heating grades “U.S. Sample grade.”

Be careful not to confuse grain that is heating with sound grain that is warm due to storage in bins or other containers during hot weather.

INSECT INFESTATION

The presence of live weevils or other live insects injurious to stored grain[1] indicates probable infestation. Apply the special grade "Infested" if the inspection of the original sample or the lot as a whole reveals:

Grain	Number and Type of Insects
Wheat, Triticale, and Rye	Two or more live weevils, one live weevil and one other live insect injurious to stored grain, or two other live insects injurious to stored grain.
All other Grains	Two or more live weevils, one live weevil and five other live insects injurious to stored grain, or ten other live insects injurious to stored grain.

MOISTURE

Moisture is an essential measure of a grain's storability and value. It is usually determined on all grain at the time of inspection.

Determine moisture on the sample as a whole (i.e., before the removal of dockage and/or foreign material). Use any device that has been tested and approved by the local State weights and measures agency.

Regardless of the device used, it is essential that it be adjusted, maintained, and operated in strict adherence to the manufacturer's recommendation.

[1] "Live weevils" include broadnosed grain weevils, rice weevils, granary weevils, and lesser grain borers. "Other live insects injurious to stored grain" include grain beetles, moths, meal worms, and larvae, except for sunflower seed weevil larvae.

TEST WEIGHT

Test weight is the weight of the volume of grain that is required to fill a Winchester bushel (2,150.42 cubic inches) to capacity. Since test weight tends to increase as moisture content decreases, determine it as quickly as possible after the grain is sampled.

For the following grains, determine test weight before the removal of dockage and/ or foreign material:

Corn
Mixed
Grain
Oats
Sorghum
Soybeans[2]

For the following grains, determine test weight after the removal of dockage and/or foreign material:

Barley
Canola[3]
Flaxseed
Rye
Sunflower Seed
Triticale
Wheat

Several devices may be used to determine test weight; all of these devices operate in a similar manner.

Step 1. Pour the sample through a funnel into a kettle until the grain overflows the kettle.

Step 2. After pouring the grain into the kettle, level it off by making three, full-length, zigzag motions with a stroker.

Step 3. Then weigh the filled kettle on either (1) a special beam scale attached to the funnel stand, (2) an electronic scale programmed to convert gram weight to test weight per bushel, or (3) a standard laboratory scale. If a standard laboratory scale is used, the gram weight must be manually converted to test weight per bushel by using a special conversion chart.

[2] On September 1, 2007, test weight was eliminated as a grading factor in soybeans. Test weight will be determined and reported, unless the applicant requests that test weight not be determined.

[3] Test weight is not a grading factor in canola. It is only determined and reported upon the request of the applicant.

DOCKAGE

Dockage is material other than the predominant grain that can be easily removed with sieves and cleaning devices. Determine dockage using either a mechanical dockage tester or hand sieves.

Determining Dockage with a Mechanical Dockage Tester

Step 1. Thoroughly clean the dockage tester. Insert the appropriate sieves and riddles and make the adjustments recommended by the manufacturer which give results comparable to FGIS standard equipment.

Step 2. Turn on the tester and pour the sample into the hopper.

Step 3. After the sample has cleared the last sieve, turn the tester off.

Step 4. Remove the dockage.

For barley, rye, safflower seed, triticale, and wheat, consider dockage to be all material--other than the predominant grain--that was removed by the aspirator, all coarse material (e.g., sticks) that passed over the riddle or top sieve, and all material that passed through the bottom sieve.

For sorghum, consider dockage to be all material that passed through the bottom sieve.

For canola, rapeseed, and mustard seed, consider dockage to be all material--other than the predominant grain--that was removed by the aspirator, all coarse material that passed over the riddle or top sieve, and all material that passed through the bottom sieve, except for small whole and broken pieces of the predominant grain that can be reclaimed by handsieving and handpicking.

Determining Dockage with Hand Sieves

Step 1. Nest the appropriate sieve(s) on top of a bottom pan.

Barley	Use a 5/64-inch triangular-hole sieve.
Canola, Mustard Seed, and Rapeseed	Place a 0.064-inch x 3/8-inch oblong-hole sieve on top of a 3/64-inch x 3/8-inch oblong-hole sieve.
Safflower Seed	Place a 0.089-inch inscribed circle triangular-hole sieve on top of a 4.5/64-inch round-hole sieve.
Sorghum	Use a 2.5/64-inch round-hole sieve.
Wheat, Rye, and Triticale	Place a 12/64-inch round-hole sieve op top of a 5/64-inch or 4.5/64-inch round-hole sieve.

Step 2. Pour the sample into the center of the top sieve, place the sieve(s) in a mechanical grain sizer, set the sizer's timer to 20, and turn it on.

If a mechanical sizer is not available, hold the sieves and bottom pan level. Then, using a steady motion, move the sieve from right to left approximately 10 inches and then return from left to right. Repeat this operation 20 times.

Step 3. Remove the dockage.

For barley, rye, safflower seed, triticale, and wheat, consider dockage to be all coarse material that remains on top of the sieves and all material that passed through the bottom sieve.

For sorghum, consider dockage to be all material that passed through the sieve.

For canola, rapeseed, and mustard seed, consider dockage to be all coarse material that remains on top of the sieves and all material that passed through the bottom sieve, except for small whole and broken pieces of the predominant grain that can be reclaimed by resieving with smaller holed sieves and handpicking.

FOREIGN MATERIAL[4]

Barley	All matter other than barley, other grains, and wild oats that remains in the sample after the removal of dockage. Determine the amount of foreign material in barley by handpicking.
Corn	All matter that passes readily through a 12/64-inch round-hole sieve and all matter other than corn that remains in the sample after sieving. Determine the amount of broken corn and foreign material in corn by using either a mechanical dockage tester or a hand sieve.
Oats	All matter other than oats, wild oats, and other grains. Determine the amount of foreign material in oats by using a hand sieve and handpicking.
Rye and Triticale	All matter other than rye (or triticale) that remains in the sample after the removal of dockage. Determine the amount of foreign material in rye or triticale by handpicking.
Sorghum	All matter, other than dockage that passes through a 5/64-inch triangular-hole sieve (i.e., broken kernels) and all matter other than sorghum that remains in the sample after sieving (i.e., foreign material). Determine the amount of broken kernels and foreign material in sorghum by using either a mechanical dockage tester or hand sieves, and handpicking.
Soybeans	All matter that passes through an 8/64-inch round-hole sieve, and all matter other than soybeans that remains in the sample after sieving. Determine the amount of foreign material in soybeans by using a mechanical tester (kicker) or hand sieves and handpicking.
Sunflower Seed	All matter other than whole sunflower seed containing kernels. Determine the amount of foreign material in sunflower seed by using a mechanical dockage tester and handpicking.

[4] Includes “broken corn and foreign material” (BCFM) in corn and “broken kernels and foreign material” (BNFM) in sorghum. The amount of foreign material in canola, flaxseed, mixed grain, mustard seed, rapeseed, or safflower seed is not usually determined.

Wheat All matter other than wheat that remains in the sample after the removal of dockage and shrunken and broken kernels. Determine the amount of foreign material in wheat by hand-picking.

Determining Foreign Material with a Mechanical Dockage Tester

Step 1. Thoroughly clean the dockage tester. Then, insert the appropriate sieves and riddles and make the adjustments recommended by the manufacturer which give results comparable to FGIS standard equipment.

Step 2. Turn the tester on and pour the sample into the hopper.

Step 3. After the sample has cleared the last sieve, turn tester off.

Step 4. Remove the foreign material.

For corn, consider BCFM to be all matter that passes readily through a 12/64 round-hole sieve and all matter other than corn that remains in the sieved sample after sieving.

For sorghum, consider “foreign material” to be all coarse material that passed over the riddle and all material--other than sorghum--handpicked from the mechanically cleaned sample; and consider “broken kernels” to be all material-- other than dockage--that passed through a 5/64-inch triangular-hole sieve.

For sunflower seed, consider foreign material to be all material--other than sunflower seed--that was removed by the aspirator, all coarse material that passed over the riddle or top sieve, all material that passed through the bottom sieve, and all matter--other than sunflower seed-- handpicked from the mechanically cleaned sample.

Determining Foreign Material with Hand Sieves

Step 1. Nest the appropriate sieve(s) on top of a bottom pan.

Corn	Use a 12/64-inch round-hole sieve.
Oats	Use a 5/64-inch triangular-hole sieve.
Sorghum	Place a 12/64-inch round-hole sieve on top of a 5/64-inch triangular-hole sieve.
Soybeans	Place a 10/64-inch x 3/4-inch slotted-hole sieve on top of an 8/64-inch round-hole sieve.

Step 2. Pour a sample portion into the center of the top sieve.

Corn	250 grams
Oats	30 grams
Sorghum	250 grams
Soybeans	125 grams

Step 3. Place the sieve(s) in a mechanical grain sizer, set the sizer's timer (20 for corn and sorghum, and 5 for oats and soybeans), and then turn it on.
If a mechanical sizer is not available, hold the sieves and bottom pan level, and, using a steady motion, move the sieve from right to left approximately 10 inches. Return from left to right to complete one sieving operation. Repeat this operation 20 times for corn and sorghum, and 5 for oats and soybeans.

Step 4. Remove the foreign material.

For corn, consider BCFM to be all matter that passes readily through a 12/64 round-hole sieve and all matter other than corn that remains in the sieved sample after sieving.

For oats, consider foreign material to be all material other than oats, other grains, and wild oats that passed through the 5/64-inch triangular-hole sieve and all coarse material (e.g., sticks) that remains on top of the sieve.

For sorghum, consider foreign material to be all material other than sorghum that remains on top of the 5/64-inch triangular-hole sieve and all coarse material that remains on top of the 12/64-inch round-hole sieve; consider “broken kernels” to be all material that passed through the 5/64-inch triangular-hole sieve.

For soybeans, consider foreign material to be all material which passed through the 8/64-inch round-hole sieve, all material other than soybeans that remains on top of the 8/64-inch round-hole sieve, and all coarse material that remains on top of the 10/64-inch x 3/4-inch slotted-hole sieve.

DAMAGED KERNELS

The most common types of kernel damage are germ, frost, immature, heat, mold, scab, sprout, insect, ground, and cob rot damage. Most of these types of damage result in some sort of discoloration or change in kernel texture. Determine the percent of damaged kernels in the sample by hand picking a dockage, foreign material, and/or shrunken and broken-free portion. To determine whether an individual kernel is damaged, examine the entire surface of the kernel.

Visual Reference Images have been developed to help inspectors with this determination. Each image is produced digitally on the official 'wheat' colored background. These are images are found on the GIPSA website. Each image shows the minimum amount of discoloration or deterioration necessary for a kernel to be considered damaged. In addition, several land grant universities have prepared brochures that provide color photographs depicting the various types of kernel damage.

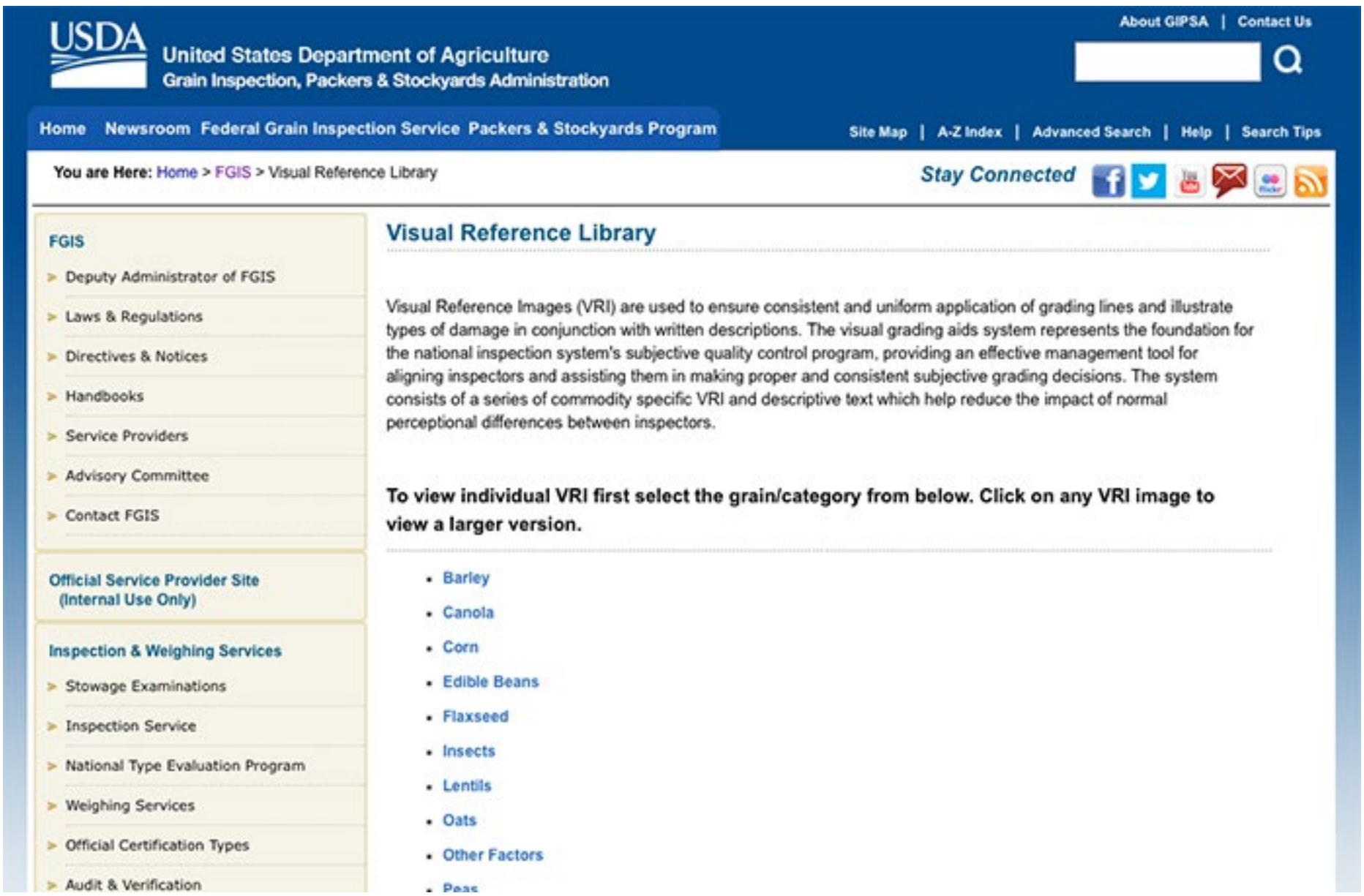

Figure 11. Visual Reference Images from GIPSA website (http://www.gipsa.usda.gov).

Type of Damage	Grain	Characteristics
Bee's Wings	Flaxseed	Kernels that are very thin, whitish, and paperlike.
Black Tip Fungus	Wheat	Kernels with black tip fungus growth on the germ and in the crease of the kernel.
Blue-Eye Mold	Corn	Kernels with blue mold in the germ. Blue-eye mold should not be confused with purple plumule, which is not a type of damage. Purple plumule is generally purple in color and is always found in the center of the germ.
Cob Rot	Corn	Kernels that are distinctly discolored or rotting as a result of a fungus that attacks corn ears.
Drier	All Grains	Kernels that are discolored, wrinkled, and blistered; or are puffed or swollen and slightly discolored, and often have damaged germs; or whose seed coats are peeling off or appear fractured.
Frost	All Grains	Kernels that are discolored, blistered, or have a slightly flaked off bran coat; or kernels with a distinctly wax-like or candied appearance due to frost.
Germ	All Grains	Kernels that are discolored by heat or mold resulting from microbial activity (fermentation), insect infestation, or sprouting.
Ground or Weather	All Grains	Kernels with dark stains or discolorations and rough cake-like appearance caused by ground and/or weather conditions.
Heat	All Grains	Kernels that are materially discolored and damaged by external heat or as the result of microbial activity (fermentation), insect infestation, or sprouting.
Immature or Green	All Grains	Kernels that are intensely green in color.

Type of Damage	Grain	Characteristics
Insect[5]	All Grains except Sunflower seed	Kernels which have been bored or tunneled by insects.
Mold (External)	All Grains	Kernels that have considerable evidence of mold.
Mold (Internal)	All Grains	Kernels that have any evidence of mold.
Purple Pigment	Sorghum	Kernels materially discolored by purple pigment.
Scab	Wheat	Kernels having a dull, lifeless, and chalky appearance.
Sprout	All Grains	Kernels that are sprouted.
Stinkbug Stung	Soybeans	Kernels that, in cross-section, show damage caused by stinkbugs. Score stinkbug stung damaged kernels at the rate of one-fourth of the actual percentage.

[5] If two or more insect-damaged kernels are found in a 15-gram portion of wheat, examine a second 15-gram portion. If two or more insect- damaged kernels are found in the second portion, examine a 70-gram portion and then combine the number of insect-damaged kernels found in all three portions. If 32 or more insect-damaged kernels are found in the combined portions (i.e., 100 grams), grade the wheat “U.S. Sample grade.” If fewer than two insect-damaged kernels are found in either the first or second portion, discontinue the examination.

PROTEIN, OIL, AND OTHER INTRINSIC CHARACTERISTICS

Determine the percent of protein, oil, and other intrinsic characteristics by using American Oil Chemists' Society (AOCS), American Association of Cereal Chemists (AACC), or FGIS approved methods, or by using any other methods which yield comparable results.

Factor	Grain
Oil Content	Canola, Corn, Flaxseed, Rapeseed, Safflower Seed, Soybeans, and Sunflower Seed.
Protein	Barley, Corn, Soybeans, and Wheat.
Starch	Corn.
Free Fatty Acid	Safflower Seed, Soybeans, and Sunflower Seed.
Iodine Value	Safflower Seed, Soybeans, and Sunflower Seed.
Erucic Acid	Canola and Rapeseed.
Glucosinolates	Canola and Rapeseed.
Wet Gluten	Hard Red Spring and Hard Red Winter Wheat

STRESS CRACK ANALYSIS IN CORN

Stress cracks are internal narrow cracks in the endosperm of the kernels. Typically, they are induced by excessive heat during drying. Stress cracks are an undesirable physical attribute in corn. Kernels of corn having stress cracks are more susceptible to breakage and quality degradation during handling and also indicate potential processing problems to corn millers.

Stress crack analysis involves a visual inspection of whole corn kernels on a backlighted lightboard. This “candling” inspection process transmits lights through the kernel, which makes internal cracks in the endosperm visible for detection.

Step 1. Using a divider, obtain an approximately 25-gram portion of corn. Select 50 whole kernels from the portion for analysis.

Do not select kernels that are broken, chipped, cracked, or those which would limit the inspector’s ability to identify stress cracks, e.g., waxy or discolored kernels.

Step 2. Place the kernels on a light board with the germ side down. Visually inspect each kernel for stress cracks and separate out stressed kernels.

Step 3. Turn the remaining kernels germ side up. Visually inspect each kernel for stress cracks and separate out stressed kernels.

Upon request, sort the stress cracked kernels into three categories: single, double, and multiple stress cracks.

Step 4. Count the total number of stress cracked kernels. Multiply the number of stressed kernels by two before reporting. Then, calculate the percentage of stress cracks to the nearest whole percent.

AFLATOXIN

Aflatoxin is a naturally occurring mycotoxin produced by two types of mold: Aspergillus flavus and Aspergillus parasiticus. Aspergillus flavus is common and widespread in nature and is most often found in corn and sorghum grown under stressful conditions, such as drought. While the presence of Aspergillus flavus does not always indicate harmful levels of aflatoxin, it does mean that the potential for aflatoxin production is present.

Aflatoxin, unlike most other factors, may concentrate in only a few kernels, and the contaminated kernels are not likely to be evenly distributed throughout the lot. Additionally, some contaminated kernels may contain many times the aflatoxin level of other contaminated kernels. Therefore, samples must be representative and sufficiently large (recommended size - 10 pounds) to compensate for the uneven distribution of the contaminant.

Methods of Analysis

Corn and some other grains and processed commodities may be tested for aflatoxin using FGIS approved methods. Some of these methods provide screening information; others provide quantitative data.

Test Kits. Several types of test kits have been developed for the analysis of aflatoxin. There are a number of aflatoxin test kits and systems commercially available that use enzyme linked immunosorbent assay (ELISA), immuno-affinity, or fluorescence technology. These tests are highly specific, sensitive, and simple to perform. FGIS has approved quantitative and qualitative test kits for use in the official system. For a complete list of approved test kits please refer to the Aflatoxin Handbook.

HPLC Method. High performance liquid chromatography (HPLC) is the most sensitive and technologically advanced quantitative method available for aflatoxin analysis. As the name indicates, aflatoxins are separated from each other and from interfering compounds chromatographically. In this case, the separation takes place as a liquid flows through a column that is packed with a material similar to that which is applied in a thin layer to a TLC plate. It then passes through a fluorescence detector.

DON

Deoxynivalenol (DON), also referred to as vomitoxin, is a naturally occurring mycotoxin produced by several species of Fusarium. Wet and cool weather from flowering time on to maturity promotes infection, resulting in scab or head blight in barley, wheat, oats, and rye. Wheat infected with scab has a tendency to have lighter weight kernels, some of which are removed during normal harvesting and some during normal cleaning operations.

Some grains and commodities may be tested officially for DON using FGIS approved methods.

Test Kits. Several types of test kits have been developed for the analysis of DON. The test kits and systems that are currently approved by FGIS use either enzyme linked immunosorbent assay (ELISA) or fluorescence technology. These tests are highly specific, sensitive, and simple to perform. FGIS has approved quantitative and qualitative test kits for use in the official system. For a complete list of approved test kits please refer to the DON Handbook.

HPLC Method. High performance liquid chromatography (HPLC) is the most sensitive and technologically advanced quantitative method available for DON analysis.

FUMONISIN

Fumonisins are environmental toxins produced by molds that grow on agricultural commodities in the field or during storage. Fusarium moniliforme is the parent fungi species that causes Fusarium Ear Rot, the most common corn disease in the Midwestern United States. More than ten types of fumonisins have been isolated and characterized. Of these, fumonisin B1 (FB1), B2 (FB2), and B3 (FB3) are the major fumonisins produced in nature. The most prevalent of these mycotoxins in contaminated corn is FB1, which is believed to be the most toxic. Since the fumonisin toxin can grow in corn kernels without any outward signs of mold, testing of the grain is the only positive means of verifying whether fumonisin is present.

Some grains and commodities can be officially tested for fumonisin using an FGIS approved test method: Refer to FGIS Directive 9180.71 “Fumonisin Testing Services”, for a complete list of grains, commodities and approved test methods.

ZEARALENONE

Zearalenone is the generic name for a mycotoxin that is produced by several species of fungus (Fusarium), the most notable of which is the Fusarium roseum. Species of fusarium are common and widespread in nature, and are found worldwide on most economic crops. Fusarium infection and production of zearalenone are most notable on corn, wheat, sorghum, oats, and barley.

Historically, zearalenone has been found at low levels in corn, barley, oats, sorghum, corn meal, hay, silage, and commercial animal rations in the United States. A combination of the fungus strain, high moisture content, and a period of relatively high temperature (as in ears of corn before harvest) followed by a period of low temperature (as in corn stored on the ear in cribs) favor the production of the toxin.

Some grains and commodities can be officially tested using an approved FGIS test kit. Refer to FGIS Directive 9180.66 “Zearalenone Testing”, for a complete list of grains, commodities and approved test methods.

OCHRATOXIN A

Ochratoxin A is a toxin produced by Aspergillus ochraceus, and Penicillium verrucosum, and is one of the most abundant food-contaminating mycotoxins in the world. Aspergillus species proliferate in warm humid conditions, while the Penicillium verrucosum species is generally associated with moderate climates.

Historically, Ochratoxin has been found at low levels in corn, wheat, oats, peanuts, and other commodities in the United States. Human exposure occurs mainly through consumption of improperly stored food products, contaminated grains, pork products, and some dried fruits.

Some grains and commodities can be officially tested using an approved FGIS test kit. Refer to FGIS Directive 9180.77 “Ochratoxin A Testing”, for a complete list of grains, commodities and approved test methods.

OTHER FACTORS

Determine the percentage of “other factors” in the sample by hand-picking or hand-sieving a dockage-free portion, as required.

Factor	Grain	Characteristics
Admixture	Sunflower seed	All foreign material, except whole and broken sunflower seed hulls. (Minimum portion size = 60 grams.)
Badly Stained or Materially Weathered	Oats	Kernel discoloration due to weather has progressed to a point where many kernels are badly discolored or materially weathered. (Minimum portion size = 350 grams.)
Broken Kernels	Barley	Barley with more than ¼ of the kernel removed. (Minimum portion size = 25 grams.)
Conspicuous Admixture	Canola, Mustard seed, and Rapeseed	All matter other than the predominant grain which is readily distinguishable. (Minimum portion size = 10 grams.)
Defects (Total)	Wheat	Computed total amount of damaged kernels, foreign material, and shrunken and broken kernels.
Dehulled Seed	Sunflower seed	Hull has been completely removed from the kernel. (Minimum portion size = 30
Distinctly Green	Canola, Mustard seed, and Rapeseed	Kernels and pieces of kernels which, after being crushed, are a distinct green throughout. (Minimum portion size = 5 grams.)
Ergot	Canola, Mustard seed, and Rapeseed	Hard, reddish-brown or black grain-like mass of parasitic fungi. (Minimum portion size = 10 grams.)
Inconspicuous Admixture	Canola, Mustard seed, and Rapeseed	Any seed which is difficult to distinguish from the grain. (Minimum portion size = 5 grams.)

Factor	Grain	Characteristics
Other Grains	Barley	Kernels and pieces of kernels of black barley, corn, cultivated buckwheat, einkorn, emmer, flaxseed, guar, hull-less barley, nongrain sorghum, oats, polish wheat, popcorn, poulard wheat, rice, rye, safflower seed, sweet corn, triticale, and/or wheat. (Minimum portion size = 250 grams.)
Plump	Barley	Barley that remains on top of a 6/64- inch x ¾-inch slotted- hole sieve after sieving. (Minimum portion size = 250grams.)
Purple Mottled or Stained	Soybeans	Soybeans that are discolored by the growth of a fungus; dirt; a dirt-like substance(s), including nontoxic inoculant; or other nontoxic substances. (Minimum portion size = 400 grams.)
Sclerotinia	Canola, Mustard seed, and Rapeseed	Dark-colored or black resting bodies of the fungi *Sclerotinia* and *Claviceps.* (Minimum portion size = 10 grams.)
Shrunken and Broken Kernels	Triticale and Wheat	All matter that passes through a 0.064-inch x 3/8-inch oblong-hole sieve. (Minimum portion size = 250 grams.)
Skinned and Broken Kernels	Barley	Barley kernels with one-third or more of the hull removed; with a loose or missing hull over the germ; that are broken; or that are missing all or part of the germ. (Minimum portion size = 25 grams.)
Slightly Weathered	Oats	Condition where all kernels have a slightly weathered appearance or a sufficient number of kernels have a severely weathered appearance. (Minimum portion size = 350 grams.)
Sound	Barley and Oats	Kernels and pieces of kernels that are not damaged. The percentage of sound grain in any sample is 100 percent minus the sum of the percentage (if any) of wild oats, foreign material, all damaged grains other than the predominant grain. (Minimum portion size = 25 grams.)

Factor	Grain	Characteristics
Soybeans of Other Colors	Soybeans	Soybeans with green, black, brown, or bicolored seed coats. (Minimum portion size = 125 grams.)
Splits	Soybeans	Undamaged soybeans with more than ¼ of the bean removed. (Minimum portion size = 125 grams.)
Stones	Canola Mustard seed, Rapeseed, and Safflower seed	Concreted earthy or mineral matter and other substances of similar hardness that do not disintegrate in water. (Minimum portion size= 10 grams in canola/rapeseed; 250 grams in mustard/safflower seed.)
Suitable Malting Type	Barley	Varieties of barley that are recommended by the American Malting Barley Association and other malting types used by the malting and brewing industry. (Minimum portion size = 25 grams.)
Thin	Barley	Six-rowed Malting barley (and barley in the class “Barley”) which passes through a 5/64-inch x ¾-in slotted hole sieve. (Minimum portion size = 250 grams.)
	Rye	Rye and other matter that passes through a 0.064-inch x 3/8-inch oblong-hole sieve. (Minimum portion size = 250 grams.)
Total Dockage	Canola, Rapeseed, and Safflower seed	Computed total amount of conspicuous admixture and mechanically separated dockage. (Minimum portion size = 250 grams.)
Wild Oats	Barley and Oats	Seeds of *Avena Fatua* L. and *A. Sterilis* L. (Minimum portion size = 30 grams.)

INTRODUCTION

INSPECTING GRAIN IN THE UNITED STATES 2

OFFICIAL UNITED STATES STANDARDS FOR GRAIN 3

FEDERAL GRAIN INSPECTION SERVICE 4

OFFICIAL GRAIN INSPECTIONS 5

INTRODUCTION

INSPECTING GRAIN IN THE UNITED STATES

Nationally accepted grain standards and inspection procedures provide producers, elevator operators, and others who trade grain with common terms for describing grain; a means for determining storability and end-product yield; and a framework for improving grain quality.

Grain traders in the United States have not always had the benefit of established standards and procedures. In 1856, the Chicago Board of Trade enacted the first grain grading rules for U.S. grain. In the following years, grain trading organizations in Detroit, Milwaukee, St. Louis, Cleveland, Toledo, and New Orleans followed Chicago's lead and developed their own grading standards.

By 1871, 73 different grain inspection systems were being used in the United States, each with its own grades and grading rules. This led to chaotic market conditions. Traders buying grain under the standards in one area could not depend on the grain being designated an equivalent grade in any other area.

Around the turn of the century, the Grain Dealers National Association (now known as the National Grain and Feed Association) and several other trade groups vigorously campaigned for the adoption of voluntary, national grade standards. In response, Congress authorized the Secretary of Agriculture to organize the Division of Grain Standardization to establish uniform grades.

Finally, in 1916, the 64th Congress passed the United States Grain Standards Act (Act) "to provide for the establishment of Official United States Standards for Grain, to promote the uniform application thereof by official inspection personnel with the objectives that grain may be marketed in an orderly and timely manner and that trading in grain may be facilitated."

Over the years, a number of minor amendments made the Act and standards more meaningful. In 1968, Congress significantly broadened the scope of the Act and eliminated the mandatory interstate inspection requirement. Then, in 1976, the Act was strengthened by an amendment which established a new USDA agency, the Federal Grain Inspection Service (FGIS), to oversee

the national grain inspection and weighing system.

In October 1994, President Clinton signed the Department of Agriculture Reorganization Act of 1994 into law. As a result, FGIS was merged with the Packers and Stockyards Administration to form a new agency, the Grain Inspection, Packers and Stockyards Administration (GIPSA). This merger combined many administrative functions, but FGIS has continued to deliver its services as a separate program within GIPSA.

OFFICIAL UNITED STATES STANDARDS FOR GRAIN

The Official United States Standards for Grain provide the criteria for determining the kind, class, and condition of grain. The standards also define quality and condition factors and set grade limits based on factor determinations. Quality factors, which vary by grain, include test weight, damaged kernels, and foreign material. Condition factors include heating, objectionable odor, and insect infestation. It is important to note that the Official United States Standards for Grain are not seasonally adjusted, regardless of average new crop quality.

Presently, there are Official United States Standards for Grain for:

BARLEY	MIXED GRAIN	SOYBEANS
CANOLA	OATS	SUNFLOWER SEED
CORN	RYE	TRITICALE
FLAXSEED	SORGHUM	WHEAT

Refer to Appendix II, Grades and Grade Requirements, for a complete listing of the grades, factor requirements, and other related information for each

grain.

FEDERAL GRAIN INSPECTION SERVICE

FGIS was established to facilitate the marketing of U.S. grain by ensuring consistency in the U.S. grain inspection system. To fulfill this mandate, FGIS:

- Provides official inspection and weighing services through its field offices and FGIS designated/delegated agencies located across the United States;
- Continuously evaluates and updates the procedures and equipment used to officially inspect and weigh grain;
- Monitors the performance of FGIS licensed and authorized inspectors;
- Investigates complaints about official inspections; and
- Works closely with other USDA agencies, congressional offices, industry groups, and land-grant colleges and universities to improve grain quality and develop new grain inspection methodology.

For more information about FGIS, visit an FGIS field office or contact:

USDA-GIPSA
STOP 3601
1400 Independence Ave., S.W.
Washington, DC 20250-3601
Phone (202)720-0219
Webpage: *www.gipsa.usda.gov*

FGIS offices are located in the following cities:

Beaumont, Texas	League City, Texas	Portland, Oregon
Crowley, Louisiana	Moscow, Idaho	Stuttgart, Arkansas
Grand Forks, North Dakota	New Orleans, Louisiana	Toledo, Ohio

Kansas City, Missouri Olympia, Washington

OFFICIAL GRAIN INSPECTIONS

Those who do not have the skills, resources, or time needed to inspect grain, may for a nominal fee request that the grain be officially inspected by a State or privately owned official agency. Official grain inspection services are available nationwide to all segments of the grain industry, from farmer to exporter.

Official Agencies

Only official agencies that have been designated or delegated by FGIS may provide official inspection services. To ensure that the agencies provide reliable service, all inspection personnel must be licensed by FGIS. In addition, official agencies may use only FGIS approved equipment and inspection procedures.

Inspection Services

Official agencies offer many different types of inspection services. The most common is the official sample-lot inspection service. When this service is requested, a licensed sampler draws a representative sample from the grain and then takes it to an FGIS-approved laboratory for analysis by a licensed inspector. Another service offered by official agencies, the submitted sample inspection service, allows producers and grain handlers to draw their own samples and submit them to the nearest official agency. Many official agencies also test grain for end-use qualities, such as protein and oil content.

Review Inspections

If you question the grade or factor results assigned to a lot of grain, you may either request that the official agency reinspect the grain or ask FGIS to perform an appeal inspection.

For further information about official inspection services, contact the FGIS field office or official agency nearest you.

Section III: Grading Grain

GRADES AND GRADE DESIGNATIONS 2

SPECIAL GRADES AND SPECIAL GRADE DESIGNATIONS 3

BARLEY 7

CANOLA 9

CORN 10

FLAXSEED 11

MIXED GRAIN 12

OATS 13

RYE 14

SORGHUM 15

SUNFLOWER SEED (OIL-TYPE) 17

TRITICALE 18

WHEAT 19

Section III: Grading Grain

GRADES AND GRADE DESIGNATIONS

A grade is assigned to grain based on its factor results. The grade assigned equals the lowest grade determined for any of the factors. For example, if all of the factors were at the U.S. No. 1 level, except for one at the U.S. No. 3 level, then the lot would grade U.S. No. 3.

The Official United States Standards for Grain describe the numerical grades for barley, canola, corn, flaxseed, mixed grain, oats, rye, sorghum, soybeans, sunflower seed, triticale, and wheat. The lowest grade that may be assigned to any of these grains is “U.S. Sample grade.” This grade is applied to grain that:

1. Does not come within the grade requirements of any of the numerical grades;

2. Has a musty, sour, or commercially objectionable foreign odor;

3. Is heating;

4. Contains 32 or more insect-damaged kernels per 100 grams (wheat only);

5. Is contaminated with stones, pieces of glass, toxic seeds, unknown or toxic substances, animal filth, crotalaria seeds, or castor beans; or

6. Is otherwise of distinctly low quality.

SPECIAL GRADES AND SPECIAL GRADE DESIGNATIONS

The commercial value of grain is not always reflected in its numerical grade. Therefore, the Official United States Standards for Grain also define special grades for most grains.

Special grades denoting grain of superior quality, such as “heavy” and “bright,” usually appear in the complete grade designation immediately after the numerical grade, e.g., U.S. No. 1 Extra-Heavy Bright Oats. Other special grades usually are shown following the name of the class or subclass, e.g., U.S. No. 1 Amber Durum Wheat, Smutty, Dockage 0.7 percent.

Special Grade	Grain	Characteristics
Bleached	Oats	Treated with sulfurous acid or any other bleaching agent.
Blighted	Barley and Mixed Grain	Mixed grain (primarily barley) or barley that contains more than 4.0 percent of fungus and/or mold damaged kernels.
Bright	Oats	Has a good natural color. Has a good natural color.
Ergoty	Barley, Mixed Grain, Oats, and Triticale	Barley, mixed grain (not predominantly rye, or wheat), oats or triticale that contains more than 0.10 percent ergot.
	Mixed Grain and Rye	Mixed grain (predominantly rye or wheat), or rye that contains more than 0.30 percent ergot.
	Wheat	Wheat that contains more than 0.05 percent ergot.
Extra-Heavy	Oats	Test weight of 40 pounds or more.

Special Grade	Grain	Characteristics
Flint	Corn	Consists of 95 percent or more of flint corn.
Flint and Dent	Corn	Consists of a mixture of flint and dent corn which contains 5 to 95 percent of flint corn.
Garlicky	Barley	Contains three or more green garlic bulblets, or an equivalent quantity of dry or partly dry bulblets[1], in 500 grams.
	Mixed Grain	Mixed grain (predominantly rye, triticale, or wheat) that contains two or more green garlic bulblets, or an equivalent quantity of dry or partly dry bulblets, in 1,000 grams.
	Mixed Grain	Mixed grain (not predominantly rye, triticale, or wheat) that contains four or more green garlic bulblets, or an equivalent quantity of dry or partly dry bulblets, in 500 grams.
	Oats	Contains four or more green garlic bulblets, or an equivalent quantity of dry or partly dry bulblets, in 500 grams.
	Soybeans	Contains five or more green garlic bulblets, or an equivalent quantity of dry or partly dry bulblets, in 1,000 grams.
	Rye or Triticale	Contains seven or more green garlic bulblets, or an equivalent quantity of dry or partly dry bulblets, in 1,000 grams.
	Wheat	Contains more than 2 green garlic bulblets, or an equivalent quantity of dry or partly dry bulblets, in 1,000 grams.

[1] Three dry or partly dry garlic bulblets are equal to one green bulblet.

Special Grade	Grain	Characteristics
Garlicky	Canola	Contains more than two green garlic bulblets, or an equivalent quantity of dry or partly dry bulblets[2], in 500 grams.
Heavy	Oats	Test weight of between 38 and 40 pounds.
Infested	All Grain, except Flaxseed	Contains live weevils or other live insects injurious to stored grain.
Light Garlicky	Rye or Triticale	Contains two or more, but not more than six, green garlic bulblets, or an equivalent quantity of dry or partly dry bulblets, in 1,000 grams.
Light Smutty	Rye or Triticale	Contains an unmistakable odor of smut, or contains more than 14 average size smut balls, or an equivalent quantity of smut spores in 250 grams, but less than 30 smut balls or an equivalent quantity of smut spores.
	Wheat	Contains an unmistakable odor of smut, or contains more than 5 average size smut balls, or an equivalent quantity of smut spores in 250 grams, but less than 30 smut balls or an equivalent quantity of smut spores.
Plump	Rye	Contains not more than 5 percent of rye or other matter that passes through a 0.064-inch x 3/8-inch oblong-hole sieve.
Purple Mottled or Stained	Soybeans	Soybeans with pink or purple seed coats.

Special Grade	Grain	Characteristics
Smutty	Barley, Mixed Grain, and Oats	Barley, mixed grain (not predominantly rye, triticale, or wheat), or oats whose kernels are so covered with smut spores as to appear smutty in mass, or which contains more than 0.20 percent smut balls.
	Sorghum	Sorghum that contains 20 or more average size smut balls, or an equivalent quantity of smut spores in 10 grams.
	Rye, Triticale, or Wheat	Rye, triticale, or wheat that contains 30 or more average size smut balls, or an equivalent quantity of smut spores in 250 grams.
Thin	Oats	Contains more than 20.0 percent of oats and other matter, except fine seeds, that pass through a 0.064- inch x 3/8-inch oblong-hole sieve but remain on top of a 5/64-inch triangular-hole sieve after sieving.
Treated	Mixed Grain or Wheat	Scoured, limed, washed, sulfured, or treated so that its grade designation does not reflect its true quality.
Waxy	Corn	Consists of 95 percent or more waxy corn.

BARLEY

Barley is grain that, before the removal of dockage, consists of 50 percent or more of whole kernels of cultivated barley (Hordeum vulgare L.) and not more than 25 percent of other grains for which standards have been established under the United States Grain Standards Act. The term “barley,” as used in this context, does not include hull-less barley or black barley.

Barley is divided into two classes based on kernel characteristics: Malting barley and Barley. The class Malting barley is divided into three subclasses: Six-rowed Malting barley, Six-rowed Blue Malting barley, and Two-rowed Malting barley. The class Barley is divided into three subclasses: Six-rowed barley, Two-rowed barley, and Barley.

All subclasses of the class Malting barley are divided into four numerical grades. All subclasses of the class Barley are divided into five numerical grades and U.S. Sample grade. Refer to Appendix II and the U.S. Standards for Barley for specific grade requirements.

Grade barley as follows:

Step 1. Examine the sample for heating, odor, animal filth, castor beans, crotalaria seeds, garlic, glass, insect infestation, unknown foreign substances, and other unusual conditions.

Step 2. Divide out a representative portion from the sample and determine its moisture content.

Step 3. Determine the percentage of dockage in the sample.

Step 4. Examine the dockage-free sample for ergot, smut, stained barley, and stones.

Step 5. Determine the test weight of the dockage free sample.

Step 6. When deemed necessary, divide out representative portions from the dockage-free sample. Pearl one portion and determine its percentage of heat-damaged kernels. Partially pearl another portion and determine its percentage of injured-by-heat kernels.

Step 7. Also, when deemed necessary, divide out representative portions from the dockage-free sample and determine the percentage of blighted kernels, broken kernels or skinned and broken kernels, class, damaged kernels, foreign material, injured-by-frost, injured-by-mold, other grains, plump, sound barley, subclass, suitable malting types, thin barley, and wild oats.

CANOLA

Canola is a defined as seeds of the genus *Brassica* from which the oil shall contain less than 2 percent erucic acid in its fatty acid profile and the solid component shall contain less that 30.0 micromoles of any one or any mixture of 3-butenyl glucosinolate, 4-pentenyl glucosinolate, 2-hydroxy-3-butenyl, or 2-hydroxy-4-pentenyl glucosinolate, per gram of air dried, oil free solid. Before the removal of dockage, the seed shall contain not more than 10.0 percent of other grain for which standards have been established under the USGSA.

There are no classes or subclasses of canola. Canola is divided into three numerical grades and U.S. Sample Grade. Refer to Appendix II and the U.S. Standards for Canola for specific grade requirements. Grade canola as follows:

Step 1. Examine the sample for heating, odor, animal filth, garlic, glass, insect infestation, unknown foreign substances, and other unusual conditions.

Step 2. Divide out a representative portion from the sample and determine its moisture content.

Step 3. Divide out another representative portion from the sample and determine the percentage of mechanically separated dockage.

Step 4. When deemed necessary, divide out representative portions from the mechanically separated dockage free portion and determine the percentage of conspicuous admixture, ergot, erucic acid, glucosinolates, oil content, sclerotinia, and stones. Then, compute the percent of total dockage (mechanically separated dockage and conspicuous admixture).

Step 5. When deemed necessary, examine the mechanically separated dockage-free and conspicuous admixture free portion and determine the percentage of other-damaged kernels.

Step 6. When deemed necessary, divide out representative portions from the mechanically separated dockage free and conspicuous admixture free portion and determine the percent of heat-damaged kernels, distinctly green kernels, and inconspicuous admixture.

Then, compute the percentage of total damaged kernels (other-damaged kernels, heat-damaged kernels, and distinctly green kernels).

CORN

Corn is grain that consists of 50 percent or more of whole kernels of shelled dent corn and/or shelled flint corn (*Zea mays* L.) and not more than 10.0 percent of other grains for which standards have been established under the United States Grain Standards Act.

Corn is divided into three classes based on color: Yellow corn, White corn, and Mixed corn. There are no subclasses of corn.

Each class is divided into five numerical grades and U.S. Sample grade. Refer to Appendix II and the U.S. Standards for Corn for specific grade requirements.

Grade corn as follows:

Step 1. Examine the sample for heating, odor, animal filth, castor beans, crotalaria seeds, glass, insect infestation, stones, unknown foreign substances, and other unusual conditions.

Step 2. Divide out a representative portion from the sample and determine its moisture content.

Step 3. Determine the test weight of the sample.

Step 4. Determine the percentage of broken corn and foreign material (BCFM) in the sample.

Step 5. When deemed necessary, divide out representative portions from the BCFM free sample and determine the percentage of class, damaged kernels, flint corn, flint and dent corn, heat-damaged kernels, and waxy corn.

FLAXSEED

Flaxseed is a grain that, before the removal of dockage, consists of 50 percent or more of common flaxseed (*Linum usitatissimum* L.) and not more than 20 percent of other grains for which standards have been established under the United States Grain Standards Act and which, after the removal of dockage, contains 50 percent or more of whole flaxseed.

There are no classes or subclasses of flaxseed.

Flaxseed is divided into two numerical grades and U.S. Sample grade. Refer to Appendix II and the U.S. Standards for Flaxseed for specific grade requirements.

Grade flaxseed as follows:

Step 1. Examine the sample for heating, odor, animal filth, castor beans, crotalaria seeds, glass, unknown foreign substances, and other unusual conditions.

Step 2. Determine the percentage of dockage in the sample.

Step 3. Examine the dockage free sample for stones.

Step 4. Divide out a representative portion from the dockage free sample and determine its moisture content.

Step 5. Determine the test weight of the dockage free sample.

Step 6. When deemed necessary, divide out representative portions from the dockage-free sample and determine the percentage of damaged kernels, and heat-damaged kernels.

MIXED GRAIN

Mixed Grain is any mixture of grains for which standards have been established under the United States Grain Standards Act, provided that such mixture does not come within the requirements of any of the standards for such grains; and that such mixture consists of 50 percent or more of whole kernels of grain and/or whole or broken soybeans which will not pass through a 5/64-inch triangular hole sieve and/or whole flaxseed that passes through such a sieve after sieving.

There are no classes or subclasses of mixed grain. The standards for mixed grain provide two grades for mixtures of grain: U.S. Mixed grain and U.S. Sample grade Mixed Grain. Refer to Appendix II and the U.S. Standards for Mixed Grain for specific grade requirements. Grade mixed grain as follows:

Step 1. Examine the sample for heating, odor, animal filth, castor beans, crotalaria seeds, ergot, garlic, glass, insect infestation, smut, stones, treated seeds, unknown foreign substances, and other unusual conditions.

Step 2. Divide out a representative portion from the sample and determine its moisture content.

Step 3. Determine the test weight of the sample.

Step 4. When deemed necessary, divide out a representative portion from the sample and examine it for blighted barley kernels.

Step 5. Determine the percentage of foreign material (FM) and fines.

Step 6. When deemed necessary, divide out representative portions from the FM and fines-free sample and determine the percentage of damaged kernels,
heat-damaged kernels, and kinds of grain.

OATS

Oats are grain that consists of 50 percent or more of oats (*Avena sativa* L. and *A. byzantina* C. Koch) and may contain, singly or in combination, no more than 25 percent of wild oats and other grains for which standards have been established under the United States Grain Standards Act. There are no classes or subclasses of oats.

Oats are divided into four numerical grades and U.S. Sample grade. Refer to Appendix II and the U.S. Standards for Oats for specific grade requirements. Grade oats as follows:

Step 1. Examine the sample for heating, odor, animal filth, castor beans, crotalaria seeds, ergot, garlic, general appearance, glass, insect infestation, smut, unknown foreign substances, and other unusual conditions.

Step 2. Determine the test weight of the sample.

Step 3. Divide out a representative portion from the sample and determine its moisture content.

Step 4. Determine the percentage of coarse foreign material and coarse other grains in the sample.

Step 5. When deemed necessary, divide out representative portions from the coarse foreign material and coarse other grain-free sample and determine the percentage of fine foreign material, fine other grains, heat-damaged kernels, other damaged kernels, sound oats, and wild oats.

Step 6. Compute the percentage of total foreign material (coarse foreign material and fine foreign material) and the percentage of total other grains (coarse other grains and fine other grains).

RYE

Rye is a grain that, before the removal of dockage, consists of 50 percent or more of common rye (*Secale cereale* L.) and not more than 10 percent of other grains for which standards have been established under the United States Grain Standards Act, and that, after removal of dockage, contains 50 percent or more of whole rye.

There are no classes or subclasses of rye.

Rye is divided into four numerical grades and U.S. Sample grade. Refer to Appendix II and the U.S. Standards for Rye for specific grade requirements. Grade rye as follows:

Step 1. Examine the sample for heating, odor, animal filth, castor beans, crotalaria seeds, garlic, glass, insect infestation, unknown foreign substances, and other unusual conditions.

Step 2. Divide out a representative portion from the sample and determine its moisture content.

Step 3. Determine the percentage of dockage in the sample.

Step 4. Examine the dockage-free sample for ergot, smut, and stones.

Step 5. Determine the test weight of the dockage free sample.

Step 6. When deemed necessary, divide out representative portions from the dockage free sample and determine the percentage of damaged kernels, heat-damaged kernels, foreign material, plump kernels, and thin kernels.

SORGHUM

Sorghum is grain that, before the removal of dockage, consists of 50 percent or more of whole kernels of sorghum (*Sorghum bicolor* (L.) Moench), excluding nongrain sorghum, and not more than 10 percent of other grains for which standards have been established under the United States Grain Standards Act.

Sorghum is divided into four classes based on color: Sorghum, Tannin sorghum, White sorghum, and Mixed sorghum. There are no subclasses of sorghum.

Each class is divided into four numerical grades and U.S. Sample grade. Refer to Appendix II and the U.S. Standards for Sorghum for specific grade requirements. Grade sorghum as follows:

Step 1. Examine the sample for heating, odor, animal filth, castor beans, crotalaria seeds, garlic, glass, insect infestation, smut, unknown foreign substances, and other unusual conditions.

Step 2. Divide out a representative portion from the sample and determine its moisture content.

Step 3. Determine the test weight of the sample.

Step 4. Determine the percentage of dockage and the percentage of mechanically separated broken kernels and foreign material (BNFM) in the sample.

Step 5. When deemed necessary, divide the mechanically separated BNFM and dockage free sample into representative portions and determine the percentage of class, handpicked FM (add to mechanically separated FM to determine total), heat-damaged, damaged kernels, and stones.

SOYBEANS

Soybeans are a grain that consists of 50 percent or more of whole or broken soybeans (*Glycine max* (L.) Merr.) that will not pass through an 8/64-inch round-hole sieve and not more than 10 percent of other grains for which standards have been established under the United States Grain Standards Act.

Soybeans are divided into two classes based on color: Yellow soybeans and Mixed soybeans. There are no subclasses in soybeans. Each class is divided into four numerical grades and U.S. Sample grade. Refer to Appendix II and the U.S. Standards for Soybeans for specific grade requirements. Grade soybeans as follows:

Step 1. Examine the sample for heating, odor, animal filth, castor beans, crotalaria seeds, garlic, glass, insect infestation, purple mottled and stained, smut, stones, unknown foreign substances, and other unusual conditions.

Step 2. Divide out a representative portion from the sample and determine its moisture content.

Step 3. Determine the test weight of the sample.[3]

Step 4. When deemed necessary, divide the sample into representative portions and determine the percentage of class, damaged kernels, heat-damaged kernels, foreign material, oil, protein, soybeans of other colors, and splits.

[3] On September 1, 2007, test weight was eliminated as a grading factor in soybeans. Test weight will be determined and reported, unless the applicant requests that test weight not be determined.

SUNFLOWER SEED (OIL-TYPE)

Sunflower seed is a grain that, before the removal of foreign material, consists of 50 percent or more of cultivated sunflower seed (*Helianthus annuus* L.) and not more than 10 percent of other grains for which standards have been established under the United States Grain Standards Act. There are no classes or subclasses of sunflower seed.

Sunflower seed is divided into two numerical grades and U.S. Sample grade. Refer to Appendix II and the U.S. Standards for Sunflower Seed for specific grade requirements. Grade sunflower seed (oil-type) as follows:

Step 1. Examine the sample for heating, odor, animal filth, castor beans, crotalaria seeds, glass, insect infestation, stones, unknown foreign substances, and other unusual conditions.

Step 2. Divide out a representative portion from the sample and determine its moisture content.

Step 3. When deemed necessary, divide out a representative portion from the sample and determine the percentage of admixture.

Step 4. Determine the percentage of mechanically separated foreign material (FM) in the sample.

Step 5. Determine the test weight of the mechanically separated FM-free sample.

Step 6. When deemed necessary, divide out representative portions from the mechanically separated FM-free sample and deter-mine the percentage of dehulled kernels, damaged kernels, handpicked FM (add to mechanically separated FM to determine total FM), heat-damaged kernels, and oil content.

TRITICALE

Triticale is a grain that, before the removal of dockage, consists of 50 percent or more of triticale (*X. triticosecale* Wittmack) and not more than 10 percent of other grains for which standards have been established under the United States Grain Standards Act, and that, after removal of dockage contains 50 percent or more of whole triticale.

There are no classes or subclasses of triticale. Triticale is divided into four numerical grades and U.S. Sample grade. Refer to Appendix II and the U.S. Standards for Triticale for specific grade requirements.

Grade triticale as follows:

Step 1. Examine the sample for heating, odor, animal filth, castor beans, crotalaria seeds, garlic, glass, insect infestation, unknown foreign substances, and other unusual conditions.

Step 2. Divide out a representative portion from the sample and determine its moisture content.

Step 3. Determine the percentage of dockage in the sample.

Step 4. Examine the dockage-free sample for ergot, smut, and stones.

Step 5. Determine the test weight of the dockage free sample.

Step 6. Divide out a representative portion from the dockage free sample and determine the percentage of shrunken and broken kernels (SHBN).

Step 7. When deemed necessary, divide out representative portions from the SHBN free sample and determine the percentage of damaged kernels, heat-damaged kernels, foreign material (other than wheat or rye), and foreign material (total).

WHEAT

Wheat is a grain that, before the removal of dockage, consists of 50 percent or more of common wheat (*Triticum aestivum* L.), club wheat (*T. compactum* Host.), and durum wheat (*T. durum* Desf.), and not more than 10 percent of other grains for which standards have been established under the United States Grain Standards Act and that, after removal of dockage, contains 50 percent or more of whole kernels of one or more of these wheats.

Wheat is divided into eight classes based on color and kernel and varietal characteristics: Hard Red Spring wheat, Hard Red Winter wheat, Soft Red Winter wheat, Durum wheat, Hard White wheat, Soft White wheat, Unclasssed wheat, and Mixed wheat. The classes Hard Red Spring wheat, Durum wheat, and Soft White wheat are further divided into subclasses:

Class	**Subclass**
Hard Red Spring	Dark Northern Spring Northern Spring Red Spring
Durum	Hard Amber Durum Amber Durum Durum
Soft White	Soft White White Club Western White

Each class and subclass is divided into five numerical grades and U.S. Sample grade. Refer to Appendix II and the U.S. Standards for Wheat for specific grade requirements. Grade wheat as follows:

Step 1. Examine the sample for heating, odor, animal filth, castor beans, crotalaria seeds, garlic, glass, insect infestation, unknown foreign substances, and other unusual conditions.

Step 2. Divide out a representative portion from the sample and determine its moisture content.

Step 3. Determine the percentage of dockage in the sample.

Step 4. Examine the dockage free sample for ergot, smut, stones, and treated seeds.

Step 5. Determine the test weight of the dockage free sample.

Step 6. When deemed necessary, divide out a representative portion from the dockage free sample and determine the percentage of protein.

Step 7. Divide out a representative portion from the dockage free sample and determine the percentage of shrunken and broken kernels (SHBN).

Step 8. When deemed necessary, divide out representative portions from the SHBN free sample and determine the percentage of class, contrasting classes, damaged kernels, heat- damaged kernels, foreign material, subclass, and wheat of other classes.

Section IV: Not Standardized Grain & Commodities

Definition 2

Buckwheat 3

Confectionary Sunflower Seed 4

Cracked Corn 5

Crambe Seed 6

Hulless Barley 7

Hulless Oats 8

Khorasan Seed 9

Millet Seed 10

Mustard Seed and Rapeseed 11

Popcorn 12

Safflower Seed 13

Whole Buckwheat Groats 15

Section IV: Not Standardized Grain and Commodities

Definition

Grains for which standards have not been established under the USGSA.

Uniform inspection procedures have been established for a number of other grains normally identified as Not Standardized Grain under the USGSA. Hulless barley, hulless oats, specialty type corn, and cracked corn are commodities for which factor analysis procedures were established under the USGSA. Additionally, uniform inspection procedures have been established for buckwheat, confectionary sunflower seed, crambe seed, khorasan seed, millet seed, mustard seed, rapeseed, popcorn, safflower, and whole buckwheat groats under the authority of the Agricultural Marketing Act of 1946 (AMA) as amended. Inspection of these commodities is on a factor analysis only basis. There are no numerical grades assigned.

Factor Analysis

“Factor analysis only” service is available under both the USGSA and AMA. Only those factors deemed necessary are determined and reported.

Buckwheat

Buckwheat (*Fagopyrum esculentum* Moench) or (*Fagopyrum sagittatum* (Gilib.) is a commodity inspected under the AMA, and consists of 50.0 percent or more of whole or broken buckwheat kernels before the removal of dockage. There are no classes, subclasses, or grades for buckwheat. Inspection of buckwheat is on a factor analysis only basis. Refer to Program Directive 9180.76 for specific inspections requirements.

Inspect buckwheat as follows:

Step 1. Examine the sample for heating, odor, animal filth, castor beans, crotalaria seeds, garlic, glass, insect infestation, unknown foreign substances, and other unusual conditions.

Step 2. Divide out a representative portion from the sample and determine its moisture content.

Step 3. Determine the percentage of dockage in the sample.

Step 4. Examine the dockage-free sample for ergot and stones.

Step 5. Determine the test weight of the dockage-free sample.

Step 6. Divide out representative portions from the dockage-free sample and determine the percentage of shrunken and broken kernels (SHBN) and smut.

Step 7. When deemed necessary, divide out representative portions from the SHBN-free sample and determine the percentage of foreign material, heat-damaged kernels, and damaged kernels.

Confectionary Sunflower Seed

Confectionary sunflower seed is a commodity inspected under the AMA, that consists of 50 percent or more of whole confectionary sunflower seed (*Helianthus annuus* L.) before the removal of dockage.

Confectionary sunflower seed is grown for non-oil purposes. It includes samples of lots composed of mixtures of confectionary and oil-type seeds, or pure oil-type seeds, provided the sample or the lot is presented for inspection as sunflower seed to be marketed for non-oil purposes. Refer to Program Directive 9180.51 for specific inspection requirements.

There are no classes, subclasses, or grades of confectionary sunflower seed. Inspection of confectionary sunflower seed is on a factor analysis only basis.

Inspect confectionary sunflower seed as follows:

Step 1. Examine the sample for heating, odor, animal filth, glass, insect infestation, stones, unknown foreign substances, and other unusual conditions.

Step 2. Divide out a representative portion from the sample and determine its moisture content.

Step 3. When deemed necessary, divide out representative portions from the sample and determine the percentage of admixture, purity, and sclerotinia.

Step 4. Divide out another representative portion from the sample and determine the percentage of mechanically separated dockage and handpicked dockage.

Step 5. When deemed necessary, divide out representative portions from the mechanically separated dockage-free portion and determine the percentage of dehulled kernels, damaged kernels, off-colored seeds, and seed size.

Cracked Corn

Cracked corn is considered “not standardized grain” inspected under the USGSA that, consists of broken kernels of shelled dent corn and/or shelled flint corn. Cracked corn kernels are kernels that are chipped or broken and not 100% intact from their original shape and size. The sample must not meet the definition of corn to be considered cracked corn.

There are no classes, subclasses, or grades for cracked corn. Inspection of cracked corn is on a factor analysis only basis. Refer to Program Directive 9180.70 for specific inspection requirements.

Inspect cracked corn as follows:

Step 1. Examine the sample for heating, odor, animal filth, castor beans, crotalaria seeds, garlic, glass, insect infestation, unknown foreign substances, and other unusual conditions.

Step 2. Determine the test weight of the sample.

Step 3. Divide out a representative portion from the sample and determine its moisture content. Note: Use the calibration setting for corn.

Step 4. Divide out representative portions from the sample and determine the percentage of damaged kernels, heat damaged kernels and whole kernels, cracked corn and other material.

Crambe Seed

Crambe seed (*Crambe abyssinicia* Hochst), a commodity inspected under the AMA, is an oil seed that consists of 50.0 percent or more of whole crambe seed before the removal of foreign material.

There are no classes, subclasses, or grades for crambe seed. Inspection of crambe seed is on a factor analysis only basis. Refer to Program Directive 9180.76 for specific inspection requirements.

Inspect crambe seed as follows:

Step 1. Examine the sample for heating, odor, animal filth, castor beans, crotalaria seeds, garlic, glass, insect infestation, unknown foreign substances, and other unusual conditions.

Step 2. Divide out a representative portion to determine the percentage of foreign material in the sample.

Step 3. Determine test weight after the removal of mechanically separated foreign material on a portion of sufficient quantity to overflow the kettle and before the removal of handpicked foreign material.

Hulless Barley

Hulless barley (*Hordeum vulgare* L.) is considered “not standardized grain” inspected under the USGSA that, before the removal of dockage consists of 80 percent or more of whole kernels of hulless barley and not more than 20 percent of other grains for which standards have been established. It includes all varieties of hulless barley and is recognized by a non-adhering hull that is normally removed in the threshing process or can be removed easily by hand.

There are no classes, subclasses, or grades for hulless barley. Inspection of hulless barley is on a factor analysis only basis. Refer to Program Directive 9180.65 for specific inspection requirements. Inspect hulless barley as follows:

Step 1. Examine the sample for heating, odor, animal filth, castor beans, crotalaria seeds, glass, insect infestation, unknown foreign substances, and other unusual conditions.

Step 2. Divide out a representative portion from the sample and determine its moisture content and examine a representative portion for garlic.

Step 3. Determine the percentage of dockage in the sample.

Step 4. Examine the dockage-free sample for ergot and stones.

Step 5. Determine the test weight of the dockage-free sample.

Step 6. When deemed necessary divide out representative portions from the dockage-free sample and determine the percentage of damage, foreign material, wild oats, thin, smut, ergot, and broken kernels.

Hulless Oats

Hulless oats is considered “not standardized grain” inspected under the USGSA that, before the removal of foreign material and other grains, consists of 95 percent or more of whole kernels of hulless oats (*Avena nuda* L.) and not more than 5 percent of other grains. It is recognized by a non-adhering hull that is normally removed in the threshing process or can be removed easily by hand.

There are no classes, subclasses, or grades for hulless oats. Inspection of hulless oats is on a factor analysis only basis. Refer to Program Directive 9180.63 for specific inspection requirements.

Step 1. Examine the sample for heating, odor, animal filth, castor beans, crotalaria seeds, glass, insect infestation, unknown foreign substances, and other unusual conditions.

Step 2. Divide out a representative portion from the sample and determine its moisture content and examine a representative portion for garlic, ergot, and smut.

Step 3. Determine the percentage of foreign material in the sample.

Step 4. Determine the test weight of the foreign material-free sample

Step 5. When deemed necessary divide out representative portions from the foreign material-free sample and determine the percentage of damage, other grains, wild oats, heat-damaged, and sound.

Khorasan Seed

Khorasan seed, a commodity inspected under the AMA, is an organically grown wheat-like grain that before the removal of dockage consists of 50.0 percent or more of whole khorasan seed (*Triticum turanicum*).

There are no classes, subclasses, or grades for khorasan seed. Inspection of khorasan seed is on a factor analysis only basis. Refer to Program Directive 9180.60 for specific inspection requirements.

Inspect khorasan seed as follows:

Step 1. Examine the sample for heating, odor, animal filth, castor beans, crotalaria seeds, garlic, glass, insect infestation, unknown foreign substances, and other unusual conditions.

Step 2. Divide out a representative portion from the sample and determine its moisture content. Note: Use the calibration setting for durum wheat.

Step 3. Determine the percentage of dockage in the sample.

Step 4. Examine the dockage-free sample for ergot and stones.

Step 5. Determine the test weight of the dockage-free sample.

Step 6. Divide out representative portions from the dockage-free sample and determine the percentage of shrunken and broken kernels (SHBN) and smut.

Step 7. When deemed necessary, divide out representative portions from the SHBN-free sample and determine the percentage of foreign material, heat-damaged kernels, and damaged kernels.

Millet Seed

Millet seed, a commodity inspected under the AMA, consists of 50.0 percent or more of whole millet seed before the removal of foreign material. Whole kernels are kernels with more than three-fourths of the kernel present.

There are no classes, subclasses, or grades for millet seed. Inspection of millet seed is on a factor analysis only basis. Refer to Program Directive 9180.72 for specific inspection requirements.

Inspect millet seed as follows:

Step 1. Examine the sample for heating, odor, animal filth, castor beans, crotalaria seeds,garlic, glass, insect infestation, unknown foreign substances, and other unusual conditions.

Step 2. Divide out a representative portion to determine the percentage of foreign material in the sample.

Step 3. Determine test weight after removing mechanically separated foreign material on a portion of sufficient quantity to overflow kettle and before removal of handpicked foreign material.

Mustard Seed and Rapeseed

Mustard seed (*Brassica hirta* and *B. juncea*), and rapeseed (*Brassica campestris* and *B. napus*), commodities inspected under the AMA, are oilseeds that consists of 50.0 percent or more of whole mustard seed, or rapeseed, as applicable, before the removal of dockage. Inspect mustard seed and rapeseed as follows:

Step 1. Examine the sample for heating, odor, animal filth, garlic, glass, insect infestation, unknown foreign substances, and other unusual conditions.

Step 2. Divide out a representative portion from the sample and determine its moisture content.

Step 3. Divide out another representative portion from the sample and determine the percentage of mechanically separated dockage.

Step 4. (Rapeseed only.) When deemed necessary, divide out representative portions from the mechanically separated dockage-free portion and determine the percentage of conspicuous admixture, ergot, erucic acid, glucosinolates (canola only), oil content, sclerotinia, and stones. Then, compute the percent of total dockage (mechanically separated dockage and conspicuous admixture).

(Mustard seed only.) When deemed necessary, divide out representative portions from the mechanically separated dockage-free portion and determine the percentage of class (Oriental, Yellow, and Brown mustard seed), conspicuous admixture (buckwheat, other weed seed, and other material), ergot, sclerotinia, and stones.

Step 5. When deemed necessary, examine the mechanically separated dockage-free and conspicuous admixture-free portion and determine the percentage of other-damaged kernels.

Step 6. When deemed necessary, divide out representative portions from the mechanically separated dockage free and conspicuous admixture-free portion and determine the percent of heat-damaged kernels, distinctly green kernels, and inconspicuous admixture.

Step 7. Then, compute the percentage of total damaged kernels (other-damaged kernels, heat-damaged kernels, and distinctly green kernels).

Popcorn

Popcorn (*Zea mays* Everta), a commodity inspected under the AMA, is grain that before the removal of foreign material consists of 80.0 percent or more of whole or broken popcorn.

There are no classes, subclasses, or grades for popcorn. Inspection of popcorn is on a factor analysis only basis. Refer to Program Directive 9180.64 for specific inspection requirements.

Inspect popcorn as follows:

Step 1. Examine the sample for heating, odor, animal filth, castor beans, crotalaria seeds, glass, insect infestation, stones, unknown foreign substances, and other unusual conditions.

Step 2. Divide out a representative portion from the sample and determine its moisture content.

Step 3. Determine the percentage of foreign material (FM) in the sample.

Step 4. When deemed necessary, divide out representative portion from the BCFM-free sample and determine the percentage of damaged kernels and heat-damaged kernels.

Safflower Seed

Safflower seed, a commodity inspected under the AMA, is an oilseed that consists of 50.0 percent or more of whole or broken safflower seed (Carthamus tinctorius) before the removal of dockage.

There are no classes, subclasses, or grades in safflower seed. The inspection of safflower seed is on a factor only basis. Refer to Program Directive 9180.53 for specific inspection requirements.

Inspect safflower seed as follows:

Step 1. Examine the sample for heating, odor, animal filth, glass, insect infestation, unknown foreign substances, and other unusual conditions.

Step 2. Divide out a representative portion from the sample and determine its moisture content.

Step 3. Divide out another representative portion from the sample and determine its percentage of mechanically separated dockage.

Step 4. When deemed necessary, divide out a representative portion from the mechanically separated dockage-free portion and determine the percentage of handpicked dockage and stones.

Step 5. Compute the percentage of total dockage (mechanically separated dockage and handpicked dockage).

Step 6. When deemed necessary, divide out representative portions from the mechanically separated dockage-free portion and determine the percentage of damaged kernels (total), heat-damaged kernels, sprout-damaged kernels, other-damaged kernels, oil content, free fatty acid, and iodine value.

Specialty Type Corn

Specialty Type Corn, is a grain that before the removal of broken corn and foreign material consists of 50% or more shelled whole kernels of the species *Zea mays* L. subsp. Amylacea (*Sturtev*.) Zhuk. Specialty Type Corn typically has floury endosperm, but may include hard endosperm kernels, and the pericarp color of this subspecies may include blue, red, and purple.

There are no classes, subclasses, or grades for specialty type corn. Inspection of specialty type corn is on a factor analysis only basis. Refer to Program Directive 9180.82 “Inspection of Specialty Type Corn” for specific inspection requirements.

Inspect specialty type corn as follows:

Step 1. Examine the sample for heating, odor, animal filth, castor beans, crotalaria seeds, glass, insect infestation, stones, unknown foreign substances, and other unusual conditions.

Step 2. Determine the test weight of the sample.

Step 3. Divide out a representative portion from the sample and determine its moisture content.

Step 4. Determine the percentage of broken corn and foreign material (BCFM) in the sample.

Step 5. When deemed necessary, divide out representative portion from the BCFM-free sample and determine the percentage of damaged kernels and heat-damaged kernels.

Step 6. When deemed necessary, divide out representative portions from the BCFM-free sample and determine the percentage of damaged kernels (total), and heat-damaged kernels.

Step 7. Determine the purity of the sample.

Step 8. Determine the color of the sample.

Whole Buckwheat Groats

Whole buckwheat groats are the raw buckwheat with their inedible black hull removed. Whole buckwheat groats are either white (unroasted) or brown (roasted).

There are no classes, subclasses or grades for whole buckwheat groats. Inspection of whole buckwheat groats in on a factor only basis.

Grade whole buckwheat groats as follows:

Step 1. Examine the sample for heating, odor, animal filth, castor beans, crotalaria seeds, garlic, glass, insect infestation, unknown foreign substances, and other unusual conditions.

Step 2. Divide out a representative portion from the sample and determine stones and insects (live and dead) before the removal of foreign material.

Step 3. Divide out a representative portion from the sample and determine its moisture content. Note: Before determining the moisture on whole buckwheat groats, install the calibration constants as explained in the Operators Manual for the GAC 2100.

Step 4. Determine the percentage of whole buckwheat groats and unhulled buckwheat in the sample.

Step 5. Determine the percentage of admixture and foreign material.

Step 6. Determine the percentage of purity.

Selected References

For additional information about inspecting grain, refer to one of the following FGIS publications:

FGIS Aflatoxin Handbook.

FGIS DON Handbook.

FGIS Equipment Handbook.

FGIS Grain Inspection Handbook, Book I, Grain Sampling.

FGIS Grain Inspection Handbook, Book II, Grain Grading.

FGIS Mechanical Sampling Systems Handbook.

FGIS Program Directive 9181.1, “Testing for Starlink™ Corn.”

FGIS Program Directive 9180.66, “Zearalenone Testing.”

FGIS Program Directive 9180.71, “Fumonisin Testing.”

FGIS Program Directive 9180.76, “Inspection of Buckwheat.”

FGIS Program Directive 9180.51, “Inspection of Confectionary Sunflower Seed.”

FGIS Program Directive 9180.70, “Inspection of Cracked Corn.”

FGIS Program Directive 9180.73, “Inspection of Crambe Seed.”

FGIS Program Directive 9180.65, “Inspection of Hulless Barley.”

FGIS Program Directive 9180.63, “Inspection of Hulless Oats.”

FGIS Program Directive 9180.60, “Inspection of Khorasan.”

FGIS Program Directive 9180.72, “Inspection of Millet Seed.”

FGIS Program Directive 9180.52, “Inspection of Mustard Seed.”

FGIS Program Directive 9180.77, “Ochratoxin A.”

FGIS Program Directive 9180.82, “Inspection of Specialty Type Corn.”

FGIS Program Directive 9180.64, “Inspection of Popcorn.”

FGIS Program Directive 9180.42, “Inspection of Rapeseed.”

FGIS Program Directive 9180.53, “Inspection of Safflower Seed.”

FGIS Program Directive 9180.69, “Inspection of Whole Buckwheat Groats.”

Official United States Standards for Grain.

These publications may be viewed, downloaded, or copied from the following internet address: http://www.gipsa.usda.gov

GRADE REQUIREMENTS

SIX-ROWED MALTING BARLEY AND SIX-ROWED BLUE MALTING BARLEY 2

TWO-ROWED MALTING BARLEY 3

BARLEY 4

CANOLA 5

CORN 6

FLAXSEED 7

MIXED GRAIN 8

OATS 9

RYE 10

SORGHUM 11

SOYBEANS 12

SUNFLOWER SEED 13

TRITICALE 14

ALL CLASSES OF WHEAT EXCEPT MIXED WHEAT 15

GRADE REQUIREMENTS FOR SIX-ROWED MALTING BARLEY AND SIX-ROWED BLUE MALTING BARLEY

SIX-ROWED MALTING BARLEY AND SIX-ROWED BLUE MALTING BARLEY								
	Minimum Limits of -			Maximum Limits of -				
Grade	Test weight per bushel (pounds)	Suitable malting type (percent)	Sound barley[1] (percent)	Damaged kernels[1] (percent)	Foreign material (percent)	Other grains (percent)	Skinned broken kernels (percent)	Thin barley* (percent)
U.S. No. 1	47.0	95.0	97.0	2.0	0.5	2.0	4.0	7.0
U.S. No. 2	45.0	95.0	94.0	3.0	1.0	3.0	6.0	10.0
U.S. No. 3	43.0	95.0	90.0	4.0	2.0	5.0	8.0	15.0
U.S. No. 4	43.0	95.0	87.0	5.0	3.0	5.0	10.0	15.0

[1] Injured-by-frost kernels and injured-by-mold kernels are not considered damaged kernels or considered against sound barley.

NOTES: Malting barley shall not be infested, blighted, ergoty, garlicky, smutty, or contain any special grades. Upon request, malting barley varieties may be inspected and graded in accordance with standards established for the class Barley.

Six-rowed Malting and Six-rowed Blue Malting barley that does not meet the requirements for U.S. Nos. 1, 2, 3, or 4 Malting shall be graded under the Barley standards (see table 3).

* Use the 5/64 x 3/4 slotted-hole sieve.

GRADE REQUIREMENTS FOR TWO-ROWED MALTING BARLEY

TWO-ROWED MALTING BARLEY							
	Minimum Limits of -			Maximum Limits of -			
Grade	Test weight per bushel (pounds)	Suitable malting type (percent)	Sound barley[1] (percent)	Wild Oats (percent)	Foreign material (percent)	Skinned broken kernels (percent)	Thin barley* (percent)
U.S. No. 1	50.0	97.0	98.0	1.0	0.5	5.0	5.0
U.S. No. 2	48.0	97.0	98.0	1.0	1.0	7.0	7.0
U.S. No. 3	48.0	95.0	96.0	2.0	2.0	10.0	10.0
U.S. No. 4	48.0	95.0	93.0	3.0	3.0	10.0	10.0

[1] Injured-by-frost kernels and injured-by-mold kernels are not considered damaged kernels or considered against sound barley.

NOTES: Malting barley shall not be infested, blighted, ergoty, garlicky, smutty, or contain any special grades. Upon request, malting barley varieties may be inspected and graded in accordance with standards established for the class Barley.

Two-rowed Malting barley that does not meet the requirements for U.S. Nos. 1, 2, 3, or 4 Malting shall be graded under the Barley standards (see table 3).

* Use the 5.5/64 x 3/4 slotted-hole sieve.

GRADE REQUIREMENTS FOR BARLEY

BARLEY							
	Minimum Limits of -		Maximum Limits of -				
Grade	Test weight per bushel (pounds)	Sound barley[1] (percent)	Damaged kernels[1] (percent)	Heat Damaged (percent)	Foreign material (percent)	Broken kernels (percent)	Thin barley* (percent)
U.S. No. 1	47.0	97.0	2.0	0.2	1.0	4.0	10.0
U.S. No. 2	45.0	94.0	4.0	0.3	2.0	8.0	15.0
U.S. No. 3	43.0	90.0	6.0	0.5	3.0	12.0	25.0
U.S. No. 4	40.0	85.0	8.0	1.0	4.0	18.0	35.0
U.S. No. 5	36.0	75.0	10.0	3.0	5.0	28.0	75.0

U.S. Sample Grade:

U.S. Sample Grade shall be barley that:

(a) Does not meet the requirements for grades U.S. Nos. 1, 2, 3, 4, or 5; or

(b) Contains 8 or more stones or any number of stones which have an aggregate weight in excess of 0.2 percent of the sample weight, 2 or more pieces of glass, 3 or more crotalaria seeds (Crotalaria spp.), 2 or more castor beans (Ricinus communis L.), 4 or more particles of an unknown foreign substance(s) or a commonly recognized harmful or toxic substance(s), 8 or more cocklebur (Xanthium spp.) or similar seeds singly or in combination, 10 or more rodent pellets, bird droppings, or equivalent quantity of other animal filth per 1-1/8 to 1-1/4 quarts of barley; or

(c) Has a musty, sour, or commercially objectionable foreign odor (except smut or garlic odor); or

(d) Is heating or otherwise of distinctly low quality.

[1] Includes heat-damaged kernels. Injured-by-frost kernels and injured-by-mold kernels are not considered damaged kernels.

*** Use the 5/64 x 3/4 slotted-hole sieve.**

GRADE REQUIREMENTS FOR CANOLA

CANOLA								
Grade	Maximum Limits of -							
	Damaged kernels			Conspicuous Admixture				Inconspicuous Admixture (percent)
	Heat damaged (percent)	Distinctly green (percent)	Total (percent)	Ergot (percent)	Sclerotinia (percent)	Stones (percent)	Total (percent)	
U.S. No. 1	0.1	2.0	3.0	0.05	0.05	0.05	1.0	5.0
U.S. No. 2	0.5	6.0	10.0	0.05	0.10	0.05	1.5	5.0
U.S. No. 3	2.0	20.0	20.0	0.05	0.15	0.05	2.0	5.0

U.S. Sample Grade:

U.S. Sample Grade shall be canola that:

(a) Does not meet the requirements for grades U.S. No. 1, 2, 3; or

(b) Contains 1 or more pieces of glass, 2 or more particles of an unknown foreign substance(s) or a commonly recognized harmful or toxic substance(s), or 4 or more pieces of animal filth; or

(c) Has a musty, sour, or commercially objectionable foreign odor; or

(d) Is heating or otherwise of distinctly low quality.

GRADE REQUIREMENTS FOR CORN

CORN				
Grade	Minimum Limits of -	Maximum Limits of -		
	Test weight per bushel (pounds)	Heat-Damaged kernels (percent)	Damaged kernels total (percent)	Broken Corn and Foreign material (percent)
U.S. No. 1	56.0	0.1	3.0	2.0
U.S. No. 2	54.0	0.2	5.0	3.0
U.S. No. 3	52.0	0.5	7.0	4.0
U.S. No. 4	49.0	1.0	10.0	5.0
U.S. No. 5	46.0	3.0	15.0	7.0

U.S. Sample Grade:

U.S. Sample Grade is corn that:

(a) Does not meet the requirements for grades U.S. No.1, 2, 3, 4, or 5; or

(b) Contains stones which have an aggregate weight in excess of 0.1 percent of the sample weight, 2 or more pieces of glass, 3 or more crotalaria seeds (Crotalaria spp.), 2 or more castor beans (Ricinus communis L.), 4 or more particles of an unknown foreign substance(s) or a commonly recognized harmful or toxic substance(s), 8 or more cockleburs (Xanthium spp.) or similar seeds singly or in combination, or animal filth in excess of 0.20 percent in 1,000 grams; or

(c) Has a musty, sour, or commercially objectionable foreign odor; or

(d) Is heating or otherwise of distinctly low quality.

GRADE REQUIREMENTS FOR FLAXSEED

FLAXSEED			
	Minimum Limits of -	Maximum Limits of -	
Grade	Test weight per bushel (pounds)	Heat-Damaged kernels (percent)	Damaged kernels total (percent)
U.S. No. 1	49.0	0.2	10.0
U.S. No. 2	47.0	0.5	15.0

U.S. Sample Grade is flaxseed that:

(a) Does not meet the requirements for grades U.S. No. 1, or 2; or

(b) Contains 8 or more stones which have an aggregate weight in excess of 0.2 percent of the sample weight, 2 or more pieces of glass, 3 or more crotalaria seeds (Crotalaria spp.), 2 or more castor beans (Ricinus communis L.), 4 or more particles of an unknown foreign substance(s) or a commonly recognized harmful or toxic substance(s), 10 or more rodent pellets, bird droppings, or equivalent quantity of other animal filth per 1 1/8 to 1 . quarts of flaxseed, or

(c) Has a musty, sour, or commercially objectionable foreign odor (except smut or garlic); or

(d) Is heating or otherwise of distinctly low quality.

GRADE REQUIREMENTS FOR MIXED GRAIN

MIXED GRAIN			
	Maximum Limits of -		
Grade	Moisture (%)	Damaged kernels total (%)	Heat-Damaged kernels (%)
U.S. Mixed Grain	**16.0**	**15.0**	**3.0**

U.S. Sample Grade

U.S. Sample Grade is mixed grain that:

(a) Does not meet the requirements for the grade U.S. Mixed Grain; or

(b) Contains 8 or more stones which have an aggregate weight in excess of 0.2 percent of the sample weight, 2 or more pieces of glass, 3 or more crotalaria seeds (Crotalaria spp.), 2 or more castor beans (Ricinus communis L.), 8 or more cockleburs (Xanthium spp.) or similar seeds singly or in combination, 4 or more particles of an unknown foreign substance(s) or a commonly recognized harmful or toxic substance(s), 10 or more pieces of rodent pellets, bird droppings, or an equivalent quantity of other animal filth in 1-1/8 to 1-1/4quarts of grain; or

(c) Has a musty, sour, or commercially objectionable foreign odor (except for smut or garlic); or

(d) Is heating or otherwise of distinctly low quality.

GRADE REQUIREMENTS FOR OATS

OATS					
	Minimum Limits of -		Maximum Limits of -		
Grade	Test weight per bushel (pounds)	Sound Oats (percent)	Heat-Damaged kernels (percent)	Foreign material (percent)	Wild oats (percent)
U.S. No. 1	36.0	97.0	0.1	2.0	2.0
U.S. No. 2	33.0	94.0	0.3	3.0	3.0
U.S. No. 3[1]	30.0	90.0	1.0	4.0	5.0
U.S. No. 4[2]	27.0	80.0	3.0	5.0	10.0

U.S. Sample Grade

U.S. Sample Grade are oats that:

(a) Does not meet the requirements for grades U.S. No.1, 2, 3, or 4; or

(b) Contains 8 or more stones which have an aggregate weight in excess of 0.2 percent of the sample weight, 2 or more pieces of glass, 3 or more crotalaria seeds (Crotalaria spp.), 2 or more castor beans (Ricinus communis L.), 4 or more particles of an unknown foreign substance(s) or a commonly recognized harmful or toxic substance(s), 8 or more cockleburs (Xanthium spp.) or similar seeds singly or in combination, 10 or more rodent pellets, bird droppings, or an equivalent quantity of other animal filth per 1 1/8 to 1 . quarts of oats; or

(c) Have a musty, sour, or commercially objectionable foreign odor (except smut or garlic odor) ; or

(d) Are heating or otherwise of distinctly low quality.

[1] Oats that are slightly weathered shall be graded not higher than U.S. No. 3.

[2] Oats that are badly stained or materially weathered shall be graded not higher than U.S. No. 4.

GRADE REQUIREMENTS FOR RYE

RYE						
	Minimum Limits of -	Maximum Limits of -				
		Foreign Material		Damaged Kernels		
Grade	Test weight per bushel (pounds)	Foreign matter other than wheat (percent)	Total (percent) (percent)	Heat Damaged (percent)	Total (percent)	Thin Rye (percent)
U.S. No. 1	56.0	1.0	3.0	0.2	2.0	10.0
U.S. No. 2	54.0	2.0	6.0	0.2	4.0	15.0
U.S. No. 3	52.0	4.0	10.0	0.5	7.0	25.0
U.S. No. 4	49.0	6.0	10.0	3.0	15.0	- - -

U.S. Sample Grade

U.S. Sample Grade is rye that:

(a) Does not meet the requirements for grades U.S. No.1, 2, 3, or 4; or

(b) Contains 8 or more or any number of stones which have an aggregate weight in excess of 0.2 percent of the sample weight, 2 or more pieces of glass, 3 or more crotalaria seeds (Crotalaria spp.), 2 or more castor beans (Ricinus communis L.), 4 or more particles of an unknown foreign substance(s) or a commonly recognized harmful or toxic substance(s), 2 or more rodent pellets, bird droppings, or an equivalent quantity of other animal filth per 1 1/8 to 1 1/4 quarts of rye, or

(c) Has a musty, sour, or commercially objectionable foreign odor (except smut or garlic odor); or

(d) Is heating or otherwise of distinctly low quality.

GRADE REQUIREMENTS FOR SORGHUM

SORGHUM					
	Minimum Limits of -	Maximum Limits of -			
		Damaged Kernels		Broken Kernels and foreign material	
Grade	Test weight per bushel (pounds)	Heat (percent)	Total (percent)	Foreign material (part of total) (percent)	Total (percent)
U.S. No. 1	**57.0**	**0.2**	**2.0**	**1.0**	**3.0**
U.S. No. 2	**55.0**	**0.5**	**5.0**	**2.0**	**6.0**
U.S. No. 3[1]	**53.0**	**1.0**	**10.0**	**3.0**	**8.0**
U.S. No. 4	**51.0**	**3.0**	**15.0**	**4.0**	**10.0**

U.S. Sample Grade is sorghum that:

(a) Does not meet the requirements for grades U.S. No.1, 2, 3, or 4; or

(b) Contains 8 or more stones which have an aggregate weight in excess of 0.2 percent of the sample weight, 2 or more pieces of glass, 3 or more crotalaria seeds (Crotalaria spp.), 2 or more castor beans (Ricinus communis L.), 4 or more particles of an unknown foreign substance(s) or a commonly recognized harmful or toxic substance(s), 8 or more cockleburs Xanthium spp.) or similar seeds singly or in combination, 10 or more rodent pellets, bird droppings, or an equivalent quantity of other animal filth in 1,000 grams of sorghum, 11 or more pieces of other material from any combination of animal filth, castor beans, crotalaria seeds, glass, stones, unknown foreign substances, and cockleburs, or

(c) Has a musty, sour, or commercially objectionable foreign odor (except smut odor); or

(d) Is badly weathered, heating or otherwise of distinctly low quality.

[1] Sorghum which is distinctly discolored shall not grade any higher than U.S. No. 3.

GRADE REQUIREMENTS FOR SOYBEANS

SOYBEANS					
	Maximum Limits of -				
	Damaged Kernels				
Grade	Heat (part of total) (percent)	Total (percent)	Foreign Material (percent)	Splits (percent)	Soybeans of other colors[1] (percent)
U.S. No. 1	0.2	2.0	1.0	10.0	1.0
U.S. No. 2	0.5	3.0	2.0	20.0	2.0
U.S. No. 3	1.0	5.0	3.0	30.0	5.0
U.S. No. 4	3.0	8.0	5.0	40.0	10.0

U.S. Sample Grade:

U.S. Sample Grade is soybeans that:

(a) Do not meet the requirements for grades U.S. No.1, 2, 3, or 4; or

(b) Contains 4 or more stones which have an aggregate weight in excess of 0.1 percent of the sample weight, 1 or more pieces of glass, 3 or more crotalaria seeds (Crotalaria spp.), 2 or more castor beans (Ricinus communis L.), 4 or more particles of an unknown foreign substance(s) or a commonly recognized harmful or toxic substance(s), 10 or more rodent pellets, bird droppings, or an equivalent quantity of other animal filth in 1,000 grams of soybeans, or

(c) Contain 11 or more animal filth, castor beans, crotalaria seeds, glass, stones, or unknown foreign substance(s) in any combination, or

(d) Have a musty, sour, or commercially objectionable foreign odor (except garlic odor); or

(e) Are heating or otherwise of distinctly low quality.

[1] Disregard for Mixed Soybeans

GRADE REQUIREMENTS FOR SUNFLOWER SEED

SUNFLOWER SE ED				
	Minimum Limits of -	Maximum Limits of -		
		Damaged Kernels		
Grade	Test weight per bushel (pounds)	Heat Damaged (percent)	Total (percent)	Dehulled Seed (percent)
U.S. No. 1	25.0	0.5	5.0	5.0
U.S. No. 2	25.0	1.0	10.0	5.0

U.S. Sample Grade

U.S. Sample Grade is sunflower seed that:

(a) Does not meet the requirements for grades U.S. No.1 or 2; or

(b) Contains 8 or more stones which have an aggregate weight in excess of 0.20 percent of the sample weight, 2 or more pieces of glass, 3 or more crotalaria seeds (Crotalaria spp.), 2 or more castor beans (Ricinus communis L.), 4 or more particles of an unknown foreign substance(s) or a commonly recognized harmful or toxic substance(s), 10 or more rodent pellets, bird droppings, or an equivalent quantity of other animal filth per 600 grams of sunflower seed, or

(c) Has a musty, sour, or commercially objectionable foreign odor (except smut or garlic odor); or

(d) Is heating or otherwise of distinctly low quality.

GRADE REQUIREMENTS FOR TRITICALE

TRITICALE							
Grade	Minimum Limits of -	Maximum Limits of -					
	Test weight per bushel (pounds)	Damaged Kernels		Foreign Material		Shrunken and broken kernels (percent)	Defects[3] (percent)
		Heat damaged (percent)	Total[1] (percent)	Material other than wheat or rye (percent)	Total[2] (percent)		
U.S. No. 1	48.0	0.2	2.0	1.0	2.0	5.0	5.0
U.S. No. 2	45.0	0.2	4.0	2.0	4.0	8.0	8.0
U.S. No. 3	43.0	0.5	8.0	3.0	7.0	12.0	12.0
U.S. No. 4	41.0	3.0	15.0	4.0	10.0	20.0	20.0

U.S. Sample Grade

U.S. Sample Grade is triticale that:

(a) Does not meet the requirements for grades U.S. No.1, 2, 3, or 4; or

(b) Contains 8 or more stones or any number of stones which have an aggregate weight in excess of 0.2 percent of the sample weight, 2 or more pieces of glass, 3 or more crotalaria seeds (Crotalaria spp.), 2 or more castor beans (Ricinus communis L.), 4 or more particles of an unknown foreign substance(s) or a commonly recognized harmful or toxic substance(s), 2 or more rodent pellets, bird droppings, or an equivalent quantity of other animal filth per 1 1/8 to 1 1/4 quarts of triticale; or

(c) Has a musty, sour, or commercially objectionable foreign odor (except smut or garlic odor); or

(d) Is heating or otherwise of distinctly low quality.

[1] Includes heat-damaged kernels

[2] Includes material other than wheat or rye.

[3] Defects include damaged kernels (total), foreign material (total), and shrunken and broken kernels. The sum of these three factors may not exceed the limit for defects for each numerical grade.

GRADE REQUIREMENTS FOR ALL CLASSES OF WHEAT, EXCEPT MIXED WHEAT

WHEAT									
Grade	Minimum Limits of -		Maximum Limits of -						
	Test Weight per bushel		Damaged Kernels					Wheat of other classes[2]	
	Hard Red Spring Wheat or White Club Wheat (pounds)	All other classes and subclasses (pounds)	Heat damage (part of total) (percent)	Total (percent)	Foreign material (percent)	Shrunken and broken kernels (percent)	Defects[1] (percent)	Contrasting classes (percent)	Total[3] (percent)
U.S. No. 1	58.0	60.0	0.2	2.0	0.4	3.0	3.0	1.0	3.0
U.S. No. 2	57.0	58.0	0.2	4.0	0.7	5.0	5.0	2.0	5.0
U.S. No. 3	55.0	56.0	0.5	7.0	1.3	8.0	8.0	3.0	10.0
U.S. No. 4	53.0	54.0	1.0	10.0	3.0	12.0	12.0	10.0	10.0
U.S. No. 5	50.0	51.0	3.0	15.0	5.0	20.0	20.0	10.0	10.0

U.S. Sample Grade

U.S. Sample Grade is wheat that:

(a) Does not meet the requirements for grades U.S. No.1, 2, 3, 4, or 5; or

(b) Contains 4 or more stones or any number of stones which have an aggregate weight in excess of 0.1 percent of the sample weight, 1 or more pieces of glass, 3 or more crotalaria seeds (Crotalaria spp.), 2 or more castor beans (Ricinus communis L.), 4 or more particles of an unknown foreign substance(s) or a commonly recognized harmful or toxic substance(s), 2 or more rodent pellets, bird droppings, or an equivalent quantity of other animal filth per 1,000 grams of wheat; or

(c) Contains 5 or more animal filth, castor beans, crotalaria seeds, glass, stones, or unknown foreign substance(s) in any combination; or

(d) Has a musty, sour, or commercially objectionable foreign odor (except smut or garlic odor); or

(e) Is heating or otherwise of distinctly low quality.

(f) Contains more than 31 insect-damaged kernels in 100 grams.

[1] Defects include damaged kernels (total), foreign material, and shrunken and broken kernels. The sum of these three factors may not exceed the limit for defects for each numerical grade.

[2] Unclassed wheat of any grade may contain not more than 10.0 percent of wheat of other classes.

[3] Includes contrasting classes.